2

The Enduring Success of Japan's Liberal Democratic Party

Today, Japan is the world's fourth-largest economy and a close ally of the United States. Yet its politics are highly anomalous: It is a democracy in which one party wins nearly every election. This party, the Liberal Democratic Party (LDP), has won pluralities in all but one of the twenty-two elections to Japan's Lower House that have been held since the party's formation in 1955.[1] In fourteen of these elections, the LDP's plurality was a majority, meaning it exceeded 50% of seats. In seven of them, its seat share exceeded 60%. While the *non*democratic world furnishes plenty of examples of ruling parties that are never out of power, the democratic world does not. This extraordinary string of electoral victories, with only one real loss in sixty-nine years, in an institutional setting in which the party controlling a majority in the Lower House elects the prime minister, has given the LDP a degree of influence over the lives of Japan's 126 million inhabitants that exceeds that of any other democratically elected political party, including the longstanding governing parties of Sweden, Italy, Israel, Mexico, and Botswana, to which the LDP has been compared.

While this string of election victories would raise eyebrows in any democracy, it is even more stunning when one recalls that the electoral system used to select Lower House members was reformed in early 1994, when the LDP found itself out of government for the first time. As I explain below, the LDP's first stint as the opposition was triggered by a split in its ranks, which saw some of its lawmakers supporting a nonconfidence motion sponsored by the opposition and leaving the party. While the party managed to retain its plurality in the election held in 1993, its seat share dipped just low enough to see the longstanding opposition parties team up with the new parties created by LDP defectors to form the first non-LDP government since 1955. This government, an eight-party

[1] As this book was going to press, a snap election was held on October 27, 2024. This is not included in this tally.

Downloaded from https://www.cambridge.org/core. Oxford Union Society, on 11 May 2025 at 21:01:11, subject to the Cambridge Core terms of use, available at https://www.cambridge.org/core/terms. https://doi.org/10.1017/9781009588522.002

coalition, set its sights on reforming the electoral system, on the grounds that the system in place since 1947 had by then been deemed conducive to single-party dominance. A new system was chosen with a view to maximizing the probability that elections would feature programmatic duels between two large parties, each with a shot at controlling government. Despite its enactment in 1994, today, thirty years after the reform was passed, the LDP appears as dominant as it has always been and no such second party exists. If anything, election outcomes in recent years are reminiscent of the first few elections of the party's existence, with seat shares in the mid–late fifties (2021) and sixties (2012, 2014, and 2017).

By now, it is obvious that we can add Japan's 1994 electoral reform to the list of near-cataclysmic changes the LDP has weathered successfully. Others consist of the transformation to Japan's society and economy wrought by its rise from occupied, defeated power in the late 1940s to the world's second-largest economy in the late 1960s, and then the nearly three decades of anemic economic growth and deflation it has experienced since the 1990s. These changes generated pressures from which politics was not immune: The collapse of the traditional opposition in the 1990s was followed by a period in which programmatic competition between the LDP and a second party, the Democratic Party of Japan (DPJ), came to fruition. Then, the election of the second-ever non-LDP government in 2009 eventually culminated in defections from the ruling DPJ, which kicked off further changes in the party system, as new parties formed, the LDP returned to power, and the new parties reconstituted themselves. The LDP has also survived revelations of corruption and incompetence, with policy mistakes including overlooking evidence that North Korean agents were disappearing people off Japanese beaches, failing to ensure that adequate safeguards were in place at nuclear reactors, misplacing millions of pension records, failing to devise measures to stem the rapid aging of society, and failing to address the root causes of Japan's prolonged economic malaise, among others. Despite each revelation leading to a pronounced souring of opinion against the party, none have been sufficient to dislodge it from power, and many have had near-imperceptible impacts on election results. Why? Why has the LDP managed to stay so aloof from changes wrought by shifts in Japan's economic power and international influence, party system reconstitution, corruption, policy missteps, and electoral reform?

As I explained in Chapter 1, this book tackles a question of general interest: how political parties seek to stay in power. It offers a theory, also of general interest, which holds that under the right institutional conditions, governing parties will be able to make the distribution of central government resources to groups of voters conditional on how those

Downloaded from https://www.cambridge.org/core. Oxford Union Society, on 11 May 2025 at 21:01:11, subject to the Cambridge Core terms of use, available at https://www.cambridge.org/core/terms. https://doi.org/10.1017/9781009588522.002

groups vote. While *how*, exactly, governing parties seek to tie resources to electoral support will vary, I argue that when there is a dominant party, this party will be able to leverage resources in a manner that makes it extraordinarily difficult for certain groups of voters to cast their votes for anyone else. This restricts the freedom of voters to vote for whoever they like and weakens the capacity of elections to function as a transmission belt for voter preferences. Having a dominant party, Japan presents a nice laboratory in which the theory can be tested. However, Japan is far more than "just" a laboratory: Its politics present a puzzle of great substantive importance, and concerted attempts to explain puzzles have the potential to yield theoretical insights that can reorient scholarship on the form and functioning of democracy toward new lines of inquiry.

With these aims in mind, the purpose of this chapter is twofold. First, I flesh out the substantive puzzle that motivates this research. I present data on the outcomes of every Lower House election the LDP has fought since its inception in 1955. To make sense of these outcomes, I explain how the electoral systems Japan has used during this time convert votes cast for parties into seats for those parties. I describe the circumstances surrounding the two elections that saw the formation of non-LDP governments, in 1993 and 2009, respectively, and chronicle how, after the LDP regained control of government in 2012, it went on win a streak of elections, in both the Lower and Upper Houses. It is fair to say that this streak was unanticipated by scholars.

Because election outcomes are the product of an electoral *system*, which determines how votes are converted into seats, they are by no means a pure indicator of the relative strengths of different parties. Therefore, I supplement data on election results with data on the share of respondents who said they supported each party in nationally representative surveys conducted monthly since 1980. If anything, the support rates gleaned from survey data paint an even more dire picture of Japan's opposition than that painted by the election results. The impression one gets from looking at support rates is that even *chronicling* other parties and their movements, as I do in this chapter, may risk overstating their significance in contemporary Japanese politics.

Next, I move to the explanations scholars have offered for why the LDP is so dominant. Being at the helm of the world's second (and now fourth-) largest economy for sixty-nine years, the literature on the party and its staying power through bumpy economic performance, money politics scandals, policy missteps, institutional reforms, national security challenges, and inept leadership, is immense. Nevertheless, we can distil three categories of explanations. One emphasizes *structural features* of the two electoral systems Japan has used and explains how those

Downloaded from https://www.cambridge.org/core. Oxford Union Society, on 11 May 2025 at 21:01:11, subject to the Cambridge Core terms of use, available at https://www.cambridge.org/core/terms. https://doi.org/10.1017/9781009588522.002

structural features translated into advantages for the LDP and disadvantages for the opposition, respectively. Essentially, this category of explanations takes it as a given that a modicum of Japanese voters will vote LDP, without probing their reasons for doing so, and explicates how, under different electoral systems, that modicum of votes was sufficient to secure seat majorities for the party. The other two categories of explanations probe the reasons why a voter might vote for the LDP. One, which I use the umbrella label of *programmatic politics* to describe, holds that voters vote for the LDP because they prefer its policy positions, ideological orientation, leaders, or reputation for competence over the alternatives. The other category, which I call *distributive politics*, boils down to the idea that the LDP uses its access to government resources to bestow benefits on select constituents. Because there is no guarantee that those constituents will get the same benefits under an alternative governing party, they continue voting for the LDP. This second category of explanations hold that an "I'll scratch your back, if you scratch mine" relationship between the LDP and select constituents explains the party's success.

As will be obvious, the theory offered in this book falls squarely into the distributive politics camp. In its emphasis on features of Japan's *institutional setting* that make group-based clientelism (GBC) possible, it draws on pioneering work by Scheiner (2006). Its expectation that dominant parties will have incentives to make the allocation of resources a *competition* has much in common with the argument in Saito (2010), but it is able to present a more complete picture of competitive resource allocations that accounts for why that study's results were not entirely consistent with its claims. Below, I explain that distributive politics explanations appeared most persuasive when applied to elections prior to 1994. While not necessarily *crafted* to pertain to this period only, after Japan's electoral reform, elections began to feature programmatic competition and promises of particularism declined. As such, scholars stopped considering the possibility that distributive explanations could account for LDP victories. Instead, they restricted their gaze to programmatic explanations. However, just as distributive politics explanations fell out of favor, programmatic politics explanations have been dealt a major blow by recent work showing that the LDP has the least popular policy platform of any party (Eshima et al. N.D.; Horiuchi, Smith and Yamamoto 2018). If elections are fought on programmatic grounds and the LDP wins every time, then the LDP must have the most *popular* policies, not the least popular. If it has the least popular, then programmatic policies may not be dominating voter calculus to the degree we thought they were.

Ultimately, the theory and evidence in this book suggests that it was premature to assume that the rise of programmatic policy competition

Downloaded from https://www.cambridge.org/core. Oxford Union Society, on 11 May 2025 at 21:01:11, subject to the Cambridge Core terms of use, available at https://www.cambridge.org/core/terms. https://doi.org/10.1017/9781009588522.002

after electoral reform meant that distributive politics had been put on the back burner. We know from seminal work in comparative politics that parties can connect with voters on both programmatic and distributive grounds (Kitschelt and Singer 2018; Kitschelt and Kselman 2013; Magaloni, Diaz-Cayeros and Estévez 2007). They can be what is called a "diversified linkage party." The findings in this book corroborate that this is exactly what the LDP is. Furthermore, the theory helps us see *why* the LDP is a diversified linkage party. It is a diversified linkage party because LDP politicians cannot pursue an electoral strategy of GBC and tournaments when their electoral districts are *not* divisible into groups of voters, at which electoral support is discernible and government resources deliverable. While these conditions were met in more than 90% of electoral districts prior to 1994, Chapter 5 shows that the electoral reform, the municipal mergers that took place in the mid 2000s, and urbanization required the creation of many electoral districts where these conditions are *not* met. In these electoral districts, theory and evidence suggest that LDP politicians have little choice but to try to connect with voters on programmatic grounds. In contrast, their counterparts in electoral districts where the conditions *are* met can rely on distributive politics to win. This leads to a bifurcated ruling party, with some members embracing distributive politics, and others trying to craft policies that appeal to the median voter.

2.1 VICTORIOUS UNDER DIFFERENT ELECTORAL SYSTEMS

The LDP was formed on November 15, 1955 from the amalgamation of two conservative parties, the Liberal Party and the Democratic Party. These parties had emerged from a series of mergers and splits in the conservative camp that had begun during the Allied Occupation (1945–1951) and continued thereafter. A merger had been on the cards ever since the February 1955 Lower House election had returned a plurality – but not a *majority* – for the Democrats, which put them in charge of a minority government. The previous Liberal-led government had run into problems as a minority government. After protracted negotiations, in which a critical issue was who would be designated as the leader of the amalgamated party, a merger in the socialist camp finally galvanized the conservatives to set aside their differences and join forces (Kohno 1997*a*).

What kind of setting was this party operating in? Chapter IV of the Japanese constitution, promulgated in 1947 under the Allied Occupation, stipulates that Japan's legislature is comprised of two Houses, the House of Representatives (or Lower House) and the House of Councilors (or Upper House). Both Houses have the authority to elect the prime minister,

Downloaded from https://www.cambridge.org/core. Oxford Union Society, on 11 May 2025 at 21:01:11, subject to the Cambridge Core terms of use, available at https://www.cambridge.org/core/terms. https://doi.org/10.1017/9781009588522.002

authorize budgets, and conclude treaties with foreign powers, but in the event the opinion of the Houses differ, the Lower House prevails. Its members serve terms of four years, but the prime minister is permitted to dissolve the House and call for an election at any time. Upper House members, on the other hand, serve terms of six years, with elections held for half the House's members every three years. To become law, bills have to pass both Houses, but in the event a bill is rejected (or ignored for a period of sixty days) by the Upper House, it can still become law if, upon being sent back to the Lower House, two-thirds of Members agree. The Lower House is thus the more powerful House and the group with a majority in it controls government. The 1955 merger gave the newly formed LDP 63.8% of Lower House seats (298 out of 467) and 46% of Upper House seats (115 out of 250), enabling it to comfortably elect its preferred candidate as the prime minister.

2.1.1 SNTV-MMD, 1958–1993

To provide a sense of how dominant the LDP let us begin with election results. Table 2.1 presents data on the performance of the LDP and other major parties in the thirteen Lower House elections held between 1958 and 1993. The numbers in bold are the share of seats won by each party in each election. The number in parentheses underneath this is the share of valid votes cast that were won by each party. In this period, the Lower House used an electoral system called "single non-transferable vote in multimember districts" (or SNTV-MMD) to elect between 467 and 512 Members. Under this system, the country was divided into between 118 and 130 multimember districts. Each district elected between two and six candidates, with the vast majority electing either three (32% of districts), four (27%), or five (33%) candidates.[2] Voters cast a single vote, meaning that they wrote down the name of one preferred candidate. The *M* candidates with the largest vote tallies won, where *M* refers to the number of seats available in the district (the district magnitude).

In these thirteen elections, Table 2.1 shows that the LDP secured majorities in nine elections and more than 60% of seats in three. Its seat shares were often more than twice that of the second-largest party, the Japan Socialist Party (JSP), with the remainder divided amongst three smaller opposition parties: the Democratic Socialist Party (DSP), the Komeito, and Japan Communist Party (JCP). With a few exceptions, the LDP's seat share exhibited a declining trend over this period, but so did the seat share of the second-largest party (JSP). The most serious

[2] There was one electoral district that elected a single winner. It was abolished in 1990.

Downloaded from https://www.cambridge.org/core. Oxford Union Society, on 11 May 2025 at 21:01:11, subject to the Cambridge Core terms of use, available at https://www.cambridge.org/core/terms. https://doi.org/10.1017/9781009588522.002

Table 2.1 *Share of seats (in bold) and votes (in parentheses) captured by major parties in Japan's Lower House elections, 1958–1993.*

	1958	1960	1963	1967	1969	1972	1976	1979	1980	1983	1986	1990	1993
LDP	**61.5**	**63.3**	**60.6**	**57.0**	**59.2**	**55.2**	**48.7**	**48.5**	**55.6**	**48.9**	**58.6**	**53.7**	**43.6**
	(57.8)	(57.6)	(54.7)	(48.8)	(47.6)	(46.9)	(41.8)	(44.6)	(47.9)	(45.8)	(49.4)	(46.1)	(36.6)
JSP	**35.5**	**31.0**	**30.8**	**28.8**	**18.5**	**24.0**	**24.1**	**20.9**	**20.9**	**21.9**	**16.6**	**26.6**	**13.7**
	(32.8)	(27.6)	(29.0)	(27.9)	(21.4)	(21.9)	(20.7)	(19.7)	(19.3)	(19.5)	(17.2)	(24.4)	(15.4)
DSP		**3.7**	**4.9**	**6.2**	**6.4**	**3.9**	**5.7**	**6.8**	**6.3**	**7.4**	**5.1**	**2.7**	**2.9**
		(8.8)	(7.4)	(7.4)	(7.7)	(7.0)	(6.3)	(6.8)	(6.6)	(7.3)	(6.4)	(4.8)	(3.5)
Kōmeitō				**5.1**	**9.7**	**5.9**	**10.8**	**11.2**	**6.5**	**11.4**	**10.9**	**8.8**	**10.0**
				(5.4)	(10.9)	(8.5)	(10.9)	(9.8)	(9.0)	(10.1)	(9.4)	(8.0)	(8.1)
JCP	**0.2**	**0.6**	**1.1**	**1.0**	**2.9**	**7.7**	**3.3**	**7.6**	**5.7**	**5.1**	**5.1**	**3.1**	**2.9**
	(2.5)	(2.9)	(4.0)	(4.8)	(6.8)	(10.5)	(10.4)	(10.4)	(9.8)	(9.3)	(8.8)	(8.0)	(7.7)
NLC							**3.3**	**0.8**	**2.3**	**1.6**	**1.2**		
							(4.2)	(3.0)	(3.0)	(2.3)	(1.8)		
Shinsei													**10.8**
													(10.1)
Sakigake													**2.5**
													(2.6)
JNP													**6.8**
													(8.0)
Other	2.8	1.4	2.6	1.9	3.3	3.3	4.1	4.2	2.7	3.7	2.5	5.1	6.8
	(6.9)	(3.1)	(4.9)	(5.7)	(5.6)	(5.2)	(5.7)	(5.7)	(2.6)	(5.7)	(7.0)	(8.7)	(8.0)
Total seats	467	467	467	486	486	491	511	511	511	511	512	512	511

This table was compiled from data provided by Susan J. Pharr, Ministry of Internal Affairs and Communications reports, as well as Reed et al. (2013) and Curtis (1999).

LDP is Liberal Democratic Party; JSP is Japan Socialist Party; DSP is Democratic Socialist Party; JCP is Japan Communist Party; Shinsei is Japan Renewal Party; and JNP is Japan New Party. Other includes the Socialist Democratic Federation (SDF, 1979–1993).

Downloaded from https://www.cambridge.org/core. Oxford Union Society, on 11 May 2025 at 21:01:11, subject to the Cambridge Core terms of use, available at https://www.cambridge.org/core/terms. https://doi.org/10.1017/9781009588522.002

challenge – perhaps better described as a wrinkle – emerged in 1976, when a handful of LDP legislators left the LDP and formed a new party, the New Liberal Club (NLC), in protest of a corruption scandal that implicated the LDP's Prime Minister Tanaka Kakuei. In the five House of Representatives (HOR) elections contested by the NLC, the LDP's seat shares dipped below 50% in three. However, it was able to make up a governing majority by admitting conservative-inclined independents into the party after the election and soliciting the support of NLC lawmakers on key pieces of legislation (Reed 2009; Nam 1977). In a pattern that would repeat itself in subsequent years, the NLC eventually disbanded and its members rejoined the LDP in the wake of the 1986 election, which saw the LDP increase its share of seats by almost 10% above the 1983 election.

Five years later, in June 1993, a more serious wrinkle emerged. The JSP submitted a motion of no confidence in LDP Prime Minister Miyazawa Kiichi, which passed when a group of LDP lawmakers decided to vote for it. In response, Prime Minister Miyazawa Kiichi dissolved the Lower House. In the election held in August, the LDP managed 43.6% of seats. This was still more than three times the seat share of the second-largest party, the Socialists, who captured only 13.7%. However, the gap between that number of seats (223) and the number needed for a majority (256) created an opening the opposition was able to exploit. The election had been contested by three new parties, two of which were comprised of the forty-six former LDP lawmakers who had defected after the passage of the no-confidence motion. These parties, the Japan Renewal Party (Shinseito), Sakigake, and Japan New Party (JNP), appear in the final rows of Table 2.1. After votes were counted, these new parties, plus four older opposition parties, had just enough seats between them to form the first non-LDP government in thirty-eight years (Desposato and Scheiner 2008; Otake 1996).

Even though the 1993 election resulted in a non-LDP government, a postmortem revealed that this election was similar to previous elections in that by and large, incumbents were reelected (Curtis 1999, 69). The decline in the LDP's seat share between 1990 and 1993 can be attributed to the fact that LDP incumbents who had built up their careers within the confines of the party were now running from *other* parties. While the LDP fielded candidates in place of these defectors, some of whom were former Diet Members who had lost the 1990 election, voters did not vote for those candidates in large enough numbers to give the party a governing majority. To account for this election result, then, it makes more sense to ask why a sizeable number of LDP legislators sided with the Socialists in their attempt to bring down the government.

Downloaded from https://www.cambridge.org/core. Oxford Union Society, on 11 May 2025 at 21:01:11, subject to the Cambridge Core terms of use, available at https://www.cambridge.org/core/terms. https://doi.org/10.1017/9781009588522.002

While the stated reasons had to do with Prime Minister Miyazawa's foot-dragging on the issue of electoral reform, positions on this issue had become connected to a battle over the leadership of the party (Kato 1998; Cox and Rosenbluth 1995; Otake 1996). The previous year, disagreement over who would lead the LDP's largest faction led to its splintering as those on the losing side left the faction. It was this group of lawmakers who sided with the Socialists on the no-confidence motion. While these lawmakers might have had more reason to support electoral reform than the average LDP lawmaker, leadership tussles that threatened the party's hold on power were nothing new. In 1955, one had almost derailed the merger. In 1980, a similar tussle had also led to a Socialist-sponsored no-confidence motion, which a group of LDP lawmakers, unhappy over the party's selection of leader, had abstained from voting on. In contrast to what happened in 1993, however, in 1980 the disgruntled LDP lawmakers had decided to stay in the party and work out their problems, rather than leave (Curtis 1999).

Unsurprisingly, one of the most prominent items on the new non-LDP government's agenda, which parties in the coalition had campaigned on during the 1993 election, was electoral reform. By 1993, Japan's SNTV-MMD electoral system had come to be blamed for a variety of ills. As I explain below, one of those ills was creating the conditions believed to be conducive to single-party dominance (Otake 1996; Cox and Niou 1994). After a period of negotiation, the system introduced, which is still in use as of the time of writing, is called mixed-member majoritarian (MMM). It is comprised of two electoral "tiers" that overlay each other. Voters cast a single vote in each tier, for a total of two votes each.

One tier is comprised of single-seat-districts (SSDs). Initially, there were 300 SSDs, but this number has been reduced over time and is 289 today. In one's SSD, voters cast a single vote for their preferred SSD candidate and the candidate capturing the most votes wins the seat. In the second tier, closed-list proportional representation (PR) is used. The country is partitioned into eleven PR blocs, each of which is made up of one or more prefecture.[3] Initially, district magnitudes varied from six in the smallest bloc to 33 in the most populous bloc. Nowadays, they range from six to 29. Whereas a total of 200 members entered the Lower House via the PR tier in the 1996 election, this number was reduced to 180 in 1999 and is 176 today. In each bloc, parties present voters with lists of candidates, the order of which is fixed prior to the election and unalterable by voters, and voters select one of these lists (Reed and Thies 2001). Votes cast for the parties in each bloc are converted into seats for those

[3] Japan's administrative setting is described in greater detail in Chapter 5.

Downloaded from https://www.cambridge.org/core. Oxford Union Society, on 11 May 2025 at 21:01:11, subject to the Cambridge Core terms of use, available at https://www.cambridge.org/core/terms. https://doi.org/10.1017/9781009588522.002

parties according to the divisor-based method, d'Hondt (Catalinac and Motolinia 2021*b*).

Under MMM, the results in each tier are independent from each other, meaning that the total number of seats a party wins is the sum of the number of seats it wins in both tiers.[4] The fact that every SSD counts (in the sense of adding to a party's seat share), combined with the fact that there is larger number of SSDs than PR seats (initially, 300 to 200), led to expectations that MMM would foster a party system characterized by two large parties and a handful of smaller ones (Rosenbluth and Thies 2010; Bawn and Thies 2003). Because only one candidate can be successful in an SSD, it was thought that SSDs would become duels between candidates of two larger parties (Catalinac 2018; Cox 1990; Downs 1957). Because votes are converted into seats in a relatively proportional manner under PR, it was thought that competition in the PR blocs would feature those two larger parties, plus a few more (Cox and Schoppa 2002).

It took several years for Japan's party system to conform to these predictions. After the electoral reform legislation passed both Houses in March 1994, disagreements between the coalition partners began surfacing. Taking a page from the Socialists' playbook, LDP politicians waited for the right opportunity to exploit those disagreements. They did not have to wait long: In April, another spat between the coalition partners led to the Socialists leaving the coalition, immediately after they had thrown their support behind the coalition's candidate for the prime minister in the Diet. Two months later, the LDP announced its plans to submit a no-confidence motion in the new government. In response, the new prime minister, Hata Tsutomu, resigned. The LDP then proposed a coalition between the Socialists and another disaffected coalition member, the Sakigake. On June 29, the plan was realized when the Socialists' leader won a Lower House vote called to elect a new prime minister, over the candidate put forward by the non-LDP governing coalition. The LDP thus found itself back in government in a coalition with a party it had fought against for nearly half a century, on the one hand, and a party comprised of former members who had caused its loss of government the year prior, on the other (Curtis 1999).

The remaining members of the non-LDP coalition included older opposition parties that had existed since the 1960s (the DSP and Komeito) and two of the three parties that had been formed the previous

[4] Note that this distinguishes MMM from the other type of mixed-member system, mixed-member proportional (MMP). Under MMP, the total number of seats a party wins is derived solely from the share of votes it wins in the PR tier. This gives parties incentives to chase PR votes and assign relatively little importance to winning SSDs (Catalinac and Motolinia 2021*a*; Krauss, Nemoto and Pekkanen 2012).

Downloaded from https://www.cambridge.org/core. Oxford Union Society, on 11 May 2025 at 21:01:11, subject to the Cambridge Core terms of use, available at https://www.cambridge.org/core/terms. https://doi.org/10.1017/9781009588522.002

year (JNP and Japan Renewal Party). Following the inauguration of the LDP–JSP–Sakigake governing coalition, these parties entered into talks to create a single opposition party that they hoped would be able to challenge the LDP in the next Lower House election, which had to take place by July 1997. Under MMM, mounting a serious challenge to a governing party requires fielding enough candidates capable of placing first in their respective SSDs, in addition to winning PR votes. To this end, the New Frontier Party (NFP) was launched in December 1994. Both the LDP and the NFP concentrated on building consensuses within their parties over which candidate should run in each SSD and how the order of candidates on the eleven PR lists would be decided. The LDP tended to have more than one viable contender in rural SSDs and few viable contenders in urban SSDs; the NFP tended to have the reverse (Reed 1995).

2.1.2 MMM, 1994–2021

Table 2.2 displays data on the performance of the LDP and other major parties in the first five HOR elections following the 1994 reform. Each cell reports a party's total share of seats won in that election in bold, at the top. Below this are two subcolumns, one containing information about the party's performance in the PR tier (left subcolumn) and the other containing information about the party's performance in the SSD tier (right subcolumn). In the left subcolumn, the figure in bold is the share of PR seats won, while the figure below that is the share of PR votes won. In the right subcolumn, the figure in bold is the share of SSDs won, while the figure below that is the share of SSD votes won.

In the first election held under the new system, in 1996, the LDP captured 47.8% of HOR seats. The second-largest party, the NFP, captured 31.2% of seats. While the NFP's share was considerably smaller than that captured by the LDP, it was larger than the share captured by the second-largest party in the last few elections held under the old electoral system. On this basis, the 1996 results suggested that Japan was on its way toward becoming a system characterized by competition between two large parties and several smaller ones. Importantly, the losers of the 1996 election were the LDP's coalition partners. The Socialists, which had renamed themselves the Social Democratic Party (SDP), had already seen their seat share decline from 27.5% in the 1990 election to 13.7% in the 1993 election. This was thought to be partly due to the arrival of the three new parties described above. However, in 1996, its seat share dropped even further, to a mere 3%. Despite fielding candidates in 43 SSDs, it only won four. The Sakigake went from 2.5% of seats in the 1993 election to only 0.4% (two SSDs and zero PR seats) in 1996. After the

Downloaded from https://www.cambridge.org/core. Oxford Union Society, on 11 May 2025 at 21:01:11, subject to the Cambridge Core terms of use, available at https://www.cambridge.org/core/terms. https://doi.org/10.1017/9781009588522.002

Table 2.2 *Share of seats (in bold) and votes (in parentheses) captured by major parties in Japan's Lower House elections, 1996–2009. Under the total share of seats won, the numbers on the left pertain to seats and votes in the proportional representation tier, while those on the right pertain to seats and votes in the single-seat district tier.*

	1996		2000		2003		2005		2009	
LDP	**47.8**		**48.5**		**49.4**		**61.7**		**24.8**	
	35.0	**56.3**	**31.1**	**59.0**	**38.3**	**56.0**	**42.8**	**73.0**	**30.6**	**21.3**
	(32.8)	(38.6)	(28.3)	(41.0)	(35.0)	(43.9)	(38.2)	(47.8)	(26.7)	(38.7)
Sakigake	**0.4**									
	0.0	**0.7**								
	(1.1)	(1.3)								
NFP	**31.2**									
	30.0	**32.0**								
	(28.0)	(28.0)								
Conservative			**1.5**							
			0.0	**2.3**						
			(0.4)	(2.0)						
Liberal			**4.6**							
			10.0	**1.3**						
			(11.0)	(3.4)						
SDP	**3.0**		**4.0**		**1.3**		**1.5**		**1.5**	
	5.5	**1.3**	**8.3**	**1.3**	**2.8**	**0.3**	**3.3**	**0.3**	**2.2**	**1.0**
	(6.4)	(2.2)	(9.4)	(2.9)	(5.1)	(2.9)	(5.5)	(1.5)	(4.3)	(2.0)

(continued)

Downloaded from https://www.cambridge.org/core. Oxford Union Society, on 11 May 2025 at 21:01:11, subject to the Cambridge Core terms of use, available at https://www.cambridge.org/core/terms. https://doi.org/10.1017/9781009588522.002

Table 2.2 *(continued)*

	1996		2000		2003		2005		2009	
DPJ	**10.4**		**26.3**		**36.9**		**23.5**		**64.2**	
	17.5	**5.7**	**26.1**	**26.7**	**40.0**	**35.0**	**33.9**	**17.3**	**48.3**	**73.7**
	(16.1)	(10.6)	(25.2)	(27.6)	(37.4)	(36.7)	(31.0)	(36.4)	(42.2)	(47.4)
Komeito			**6.3**		**7.1**		**6.5**		**4.4**	
			13.3	**2.3**	**13.9**	**3.0**	**12.8**	**2.7**	**11.7**	**0.0**
			(13.0)	(2.0)	(14.8)	(1.5)	(13.3)	(1.4)	(11.5)	(1.1)
JCP	**5.2**		**4.2**		**1.9**		**1.9**		**1.9**	
	12.0	**0.7**	**11.1**	**0.0**	**5.0**	**0.0**	**5.0**	**0.0**	**5.0**	**0.0**
	(13.1)	(12.6)	(11.2)	(12.1)	(7.8)	(8.1)	(7.3)	(7.3)	(7.0)	(4.2)
Your party									**1.0**	
									1.7	**0.7**
									(4.3)	(0.9)
Other	**2.0**		**4.6**		**3.4**		**4.9**		**2.2**	
	0.0	**3.3**	**0.0**	**7.1**	**0.0**	**5.7**	**2.2**	**6.7**	**0.5**	**3.3**
	(2.5)	(6.7)	(1.5)	(9.0)	(0.0)	(6.9)	(4.7)	(5.6)	(4.0)	(5.7)
Total	**500**		**480**		**480**		**480**		**480**	
	200	**300**	**180**	**300**	**180**	**300**	**180**	**300**	**180**	**300**

The total share of seats won by each party appears in bold above each bar. Below this, the party's seat share in the PR (left) and SSD (right) tier appears, also in bold. Below that, in parentheses, is the share of votes the party won in the PR (left) and SSD (right) tier. DPJ is Democratic Party of Japan; NFP is New Frontier Party; and SDP is Social Democratic Party of Japan (the Japan Socialist Party renamed). Other includes minor parties and Independents.

Downloaded from https://www.cambridge.org/core. Oxford Union Society, on 11 May 2025 at 21:01:11, subject to the Cambridge Core terms of use, available at https://www.cambridge.org/core/terms. https://doi.org/10.1017/9781009588522.002

election, the LDP decided to keep these parties in the coalition, albeit with no Cabinet portfolios, but began casting around for alternative coalition partners.

Like all large parties in the history of Japanese politics, the NFP was plagued with dissension. In 1997, twelve NFP members abandoned collective efforts to fashion the party into a second majority-seeking party and decided to rejoin the LDP. With these new members, the LDP was able to reclaim its Lower House majority. After a period of internal conflict, the NFP eventually fell apart at the end of 1997 when its leader, former LDP heavyweight Ozawa Ichiro, announced he was leaving. Ozawa formed a new party, the Liberal Party. In April 1998, other former NFP members announced that they were joining the DPJ. Created by Socialist and Sakigake politicians unhappy with their leaders' decisions to ally with the LDP, the DPJ had been the third-highest vote-getter in the 1996 election. It had captured 10.4% of seats and among these, seventeen SSDs. With the influx of new members, the DPJ, which refounded itself in the process, became the largest opposition party in the Lower House. It would hold this honor until 2016, when further upheaval in the party system would lead to its disintegration.

Another hint that a two-party system was emerging in the wake of electoral reform came in the 1998 Upper House election. In Upper House elections, a share of members are elected in a nationwide district according to PR, while another share are elected in prefecture-wide districts according to SNTV-MMD. By virtue of the staggered nature of Upper House elections, in which one half of its Members are up for reelection every three years, some of the prefecture-wide electoral districts are single-seat districts (Nemoto and Shugart 2013). Between Lower House elections, then, both the PR tier and SSDs in Upper House elections function as a bellwether for how the LDP might fare in a Lower House election against whatever opposition party is the next-most-popular. Despite having only just refounded itself (or perhaps because of the publicity it gained from doing so), the DPJ performed unexpectedly well in the 1998 Upper House election, winning only one fewer seat in the PR tier than the LDP. For its part, the LDP found itself without the majority necessary to secure smooth passage of its bills through the Upper House. Part of the explanation for the LDP's relatively poor performance in this election was thought to be the 14% increase in turnout: Analysts suggested that the stagnation in Japan's economy energized nonhabitual voters to turn out and express their dissatisfaction with the LDP (Curtis 1999, 207–9).

The 1998 Upper House election left the LDP in a situation where, despite having regained its Lower House majority and unshackled itself from unpopular coalition partners, it now needed an alternative source

Downloaded from https://www.cambridge.org/core. Oxford Union Society, on 11 May 2025 at 21:01:11, subject to the Cambridge Core terms of use, available at https://www.cambridge.org/core/terms. https://doi.org/10.1017/9781009588522.002

of support to ensure the passage of government-sponsored legislation in the second chamber. In January 1999, the LDP entered into a coalition with Ozawa's party, the Liberals. Later that year, it convinced another smaller party, the Komeito, to join this coalition. The Komeito had contested elections since 1965, but decided to merge itself into the NFP upon that party's formation in 1994. After the NFP's disintegration in 1997, the Komeito reemerged as an autonomous party. It had performed unexpectedly well in the 1998 Upper House election, garnering 13.8% of votes in the PR tier. After the formation of this coalition, the Liberals proved an unreliable ally: In April 2000, half of their members left the coalition while the other half stayed, under a different moniker (the Conservatives) (Curtis 1999). The Komeito, on the other hand, has proved to be a reliable ally and has been the LDP's coalition partner ever since (Catalinac and Motolinia 2021*a*; Liff and Maeda 2019).

As Table 2.2 shows, in the next election, held in 2000, the LDP held its ground, winning 48.5% of seats to the DPJ's 26.5%. Together with the PR seats won by its coalition partner, the Komeito, the LDP was able to maintain its seat majority. After this election, the Conservative Party disbanded, with its members joining the LDP. The Liberal Party also disbanded, with its members joining the DPJ. A year later, the LDP elected a new leader, Koizumi Junichiro, whose Cabinet boasted unheard-of approval ratings (in the eighties) at the time of its inauguration in 2001.[5] Despite Koizumi being a great deal more popular than any of the LDP's former leaders, including Mori Yoshiro, who was supported by only 17% of Japanese voters at the time of the 2000 election, the results of the 2003 election were similar to those of 2000. While the LDP's seat share increased slightly to 49.4%, the DPJ's seat share jumped by more than 10 percentage points. Whereas it only captured 80 SSDs in 2000, by 2003, its tally had reached 105 SSDs. It also won more PR seats than the LDP.

The LDP's lukewarm results in 2003 were followed, just two years later, by a landslide victory in the 2005 election. The party managed 61.7% of seats, its best electoral performance since 1960. The DPJ's seat share, on the other hand, was reduced to 23.5%. Patterson and Maeda (2007)'s analyses suggest that these results stemmed from a nationwide swing in favor of the LDP, which came at the expense of the DPJ. The vote share of the average LDP SSD candidate increased by 3% relative to 2003, while that of the average DPJ SSD candidate decreased by 3%. In an electoral system comprised of SSDs with two serious competitors,

[5] The data on Cabinet approval and party approval referenced in this book come from the NHK Broadcasting Culture Research Institute, available at: www.nhk.or.jp/bunken/research/yoron/political/2018.html.

Downloaded from https://www.cambridge.org/core. Oxford Union Society, on 11 May 2025 at 21:01:11, subject to the Cambridge Core terms of use, available at https://www.cambridge.org/core/terms. https://doi.org/10.1017/9781009588522.002

anything that can give one party's candidates an edge over the other's is likely to result in the former's victory. The LDP managed to win sixty-one more SSDs in 2005 than it did in 2003, while the DPJ lost sixty-two (Patterson and Maeda 2007). While I discuss the party's strategy in this election in more detail below, suffice to say that it encompassed a conscious effort to orient the party toward urban voters (and away from rural ones). The 2005 election showed that the LDP had lost votes in rural SSDs and gained them in urban ones. This had the effect of swinging an unprecedented number of urban SSDs its way and flattening out its support base across the country (Maeda 2010; Reed, Scheiner and Thies 2012).

Four years after the LDP won its largest-ever Lower House majority (in 2005), it was served up its first-ever Lower House defeat (in 2009). What happened in the intervening years? In September 2006, Koizumi's second term as party leader ended and he declined to run for a third. In his place, the party chose Abe Shinzo. The ensuing three years were a downward spiral. Abe's popularity suffered when the government's Social Insurance Agency was discovered to have lost 50 million pension records and he agreed to readmit former LDP politicians who had opposed the party's signature platform in the 2005 election (postal privatization) but won reelection in 2005 without the party's endorsement (Reed, Scheiner and Thies 2012). By the July 2007 Upper House election, public support for his Cabinet had halved. The LDP managed only 37 of the 121 seats up for grabs, while the DPJ captured 60 (Pempel 2010, 251). For the first time since its formation, the LDP was no longer the largest party in the Upper House. In September 2007, Abe resigned and party members selected Fukuda Yasuo. A year later, Fukuda also resigned, after sinking approval rates. Party members then threw their support behind Aso Taro, whose support rates started off lower than the former two prime ministers and followed an even-worse trajectory.

If the 2005 election showed that party leaders with a favorable public image are assets for candidates trying to place first in their SSDs, the 2009 election showed how serious of a liability an unpopular leader can be. By early 2009, Aso's support rate was in the single digits. The global financial crisis had led to a contraction in Japan's GDP and an increase in unemployment. Scandals involving Cabinet Ministers, a relatively regular occurrence in Japanese politics, appeared particularly galling in this context. Yet LDP lawmakers struggled to replace Aso (Arase 2010). At the same time, the DPJ's performance in the Upper House election the year before had knitted together previously divided groups in the party and focused the minds of lawmakers on presenting the DPJ as a unified party that posed a viable alternative to the LDP (Konishi 2009). In July 2009,

Downloaded from https://www.cambridge.org/core. Oxford Union Society, on 11 May 2025 at 21:01:11, subject to the Cambridge Core terms of use, available at https://www.cambridge.org/core/terms. https://doi.org/10.1017/9781009588522.002

public support for the DPJ exceeded that of the LDP for the first time ever, in the same month that Prime Minister Aso dissolved the House and called for new elections. Having waited until the very end of the term of Lower House Members, presumably in the hope that something might happen to boost the party's popularity, Aso had little choice.

Held on August 30, 2009, the election was disastrous for the LDP. Table 2.2 shows that its seat share dropped to 24.8%, while the DPJ's increased to 64.2%, the largest share of seats a party has ever obtained in a Lower House election in Japan. Having obtained 219 SSDs in 2005, the LDP managed only 64 in 2009. The DPJ, in contrast, captured only 52 SSDs in 2005 but walked away with 221 SSDs in 2009. All told, 60% of LDP incumbents (184 in total) lost their seats, many of whom were senior, experienced lawmakers (Maeda 2010; Pempel 2010).

Analyses revealed that the DPJ's landslide stemmed from a nationwide swing away from the LDP and toward the DPJ, just like the 2005 election, which had seen the reverse. Whereas in 2005, the LDP's SSD vote share was 47.8% and the DPJ's was 36.4%, in 2009, the parties had switched places: The LDP was at 38.7% and the DPJ was at 47.4%. According to Maeda (2010), the swing toward the DPJ impacted SSDs in a relatively uniform fashion, regardless of whether they were rural or urban, represented by an LDP heavyweight or inexperienced newcomer. His analyses revealed that SSDs that had experienced greater shifts in PR vote shares *to* the LDP between 2003 and 2005 saw greater shifts *away* from the party between 2005 and 2009. He interprets this as evidence that the LDP had been able to attract floating voters in 2005 but lost them in 2009. McElwain (2012), too, identifies this election as a turning point. Whereas LDP incumbents used to be able to rely on personal characteristics such as experience to insulate themselves from dips in their party's popularity, his analyses showed that by 2009, this was no longer working. While the LDP lost votes in all types of SSDs, the decline was noticeably larger in urban ones. The fact that rural voters turned to the DPJ was also a product of a concerted strategy of that party's leaders to appeal to them (Kushida and Lipscy 2013).

After its 2009 landslide, the DPJ found itself dependent on two parties to pass bills in the Upper House. The DPJ Prime Minister Hatoyama Yukio brought them on board as part of a coalition government. Just like the LDP-led administrations of the preceding three years, the years from September 2009 to December 2012 saw three DPJ prime ministers. Like their LDP predecessors, each kicked off their administrations with decent approval ratings: in the seventies (in the case of Hatoyama Yukio, 2009–2010), sixties (in the case of Kan Naoto, 2010–2011), and fifties (in the case of Noda Yoshihiko, 2011–2012). But before long, each saw their

Downloaded from https://www.cambridge.org/core. Oxford Union Society, on 11 May 2025 at 21:01:11, subject to the Cambridge Core terms of use, available at https://www.cambridge.org/core/terms. https://doi.org/10.1017/9781009588522.002

approval sink to the twenties or tens and for the most part, languish there (Pekkanen and Reed 2013). Hatoyama's, for example, dropped from a high of 71% immediately after his Cabinet's inauguration to just 17% by May 2010. In a manner reminiscent of their LDP predecessors, initial declines could be traced to an occurrence that called into question their judgement or gave the impression they were mismanaging a situation, but once the decline had begun, it proved difficult to reverse.

In the early 1990s, defections from the LDP showed that prime ministers are not immune to challenges from within. Recalcitrant DPJ members took criticism of their leader to a new level (Nyblade 2013). Barely a year after the inauguration of the first non-LDP government in fifteen years, and the first non-LDP government to rest on an undisputed electoral mandate, DPJ members declared they were opposed to an increase in the consumption tax, which their newly minted prime minister had announced was needed. While this had not been part of the DPJ's 2009 election manifesto, Prime Minister Kan Naoto argued that it was necessary to reign in spiraling public debt and put the nation's finances on a healthier footing. Japan's society was aging, he argued, which meant it needed to plan for a future in which a smaller workforce would be able to support the pension and health-care needs of a much-older population.

On the heels of this public disagreement, the DPJ lost the 2010 Upper House election, plunging Japanese politics back into a situation in which one party controlled one House and another party controlled the other (Thies and Yanai 2013; Kushida and Lipscy 2013). Like it had done before, the LDP attempted to exploit the disagreements within the DPJ with a motion of no confidence. This failed, but the DPJ prime minister chose not to expel the party members who had voted for the motion. Substantive questions such as whether to restart the nuclear reactors that had been placed offline after the March 2011 earthquake, tsunami, and nuclear meltdown and whether Japan should say yes to the Trans-Pacific Partnership (TPP) also divided the party, with those opposed to their leader's decisions publicly voicing their opposition (Pekkanen and Reed 2013).

In early 2012, a second major transformation of the party system began, which would prove fatal for the DPJ. The engine of this was the efforts of local politicians – mostly governors – to create new parties. As with the events of the early 1990s, these individuals were likely calculating that they could take advantage of conflict within the ruling DPJ, or they were actively encouraged by the protagonists of that conflict themselves. In January 2012, the mayor of Osaka and leader of a party formed the previous year to contest elections to the Osaka City Assembly, Hashimoto Toru, announced the launch of a new party that

Downloaded from https://www.cambridge.org/core. Oxford Union Society, on 11 May 2025 at 21:01:11, subject to the Cambridge Core terms of use, available at https://www.cambridge.org/core/terms. https://doi.org/10.1017/9781009588522.002

would run candidates in the next Lower House election. He called this the Japan Restoration Party (JRP). At the same time, Tokyo governor Ishihara Shintaro declared his intention to resign his position and form a new party. In events reminiscent of 1993, a few months later a group of forty-odd DPJ lawmakers voted against their leader's consumption tax bill and left the party (Nyblade 2013). This group formed Peoples' Life First (PLP). Soon after its formation, the PLP tabled a motion of no confidence against Prime Minister Noda, in conjunction with other opposition parties. In exchange for not supporting the motion, which would have brought down the Noda government, the LDP extracted a promise from Prime Minister Noda to hold an election "soon." It also decided to support the DPJ government's consumption tax legislation (Endo, Pekkanen and Reed 2013).

Later that same year, PLP lawmakers secured a new leader, Shiga governor Yukiko Kada, and reconstituted themselves as the Tomorrow Party of Japan (TPJ). Ishihara resigned from his position as governor of Tokyo and formed a small party, only to merge with the JRP almost immediately. Together with Your Party, which had been formed by an LDP defector prior to the 2009 election, these three parties (PLP, JRP, and YP) collectively became known as the Third Force (Pekkanen and Reed 2013; Nyblade 2013). While they were also three parties, this moniker refers to the fact that their goal was to give voters unhappy with both the LDP and the DPJ a third choice in the upcoming election.

By the time the election was held in December 2012, the DPJ had suffered seventy-five defections. It had captured 308 Lower House seats in the 2009 election; by December 2012, it had only 230 lawmakers. Nyblade (2013)'s analysis shows that relatively junior, electorally insecure DPJ lawmakers were more likely to defect than their more-senior, electorally secure counterparts. Such members, he reasons, were likely engaged in a near-continuous calculation that boiled down to asking: Are my political ambitions (most immediately, being reelected) better served by staying *in* the party or casting my lot with *another* party? By mid 2012, when the occasional defection of a DPJ member was giving way to more-frequent defections of groups of DPJ members, polls continued to show that large segments of the population disapproved of Cabinet. In a sign of the reversal in fortunes that the impending election would bring, polls showed that the percentage of respondents supporting the DPJ was now lower than the percentage supporting the LDP. More LDP politicians, Nyblade (2013) argues, would have tried to defect from the LDP prior to the 2009 election if there had been Third Force parties to defect to.

Table 2.3 displays data on the performance of the LDP and other major parties in the four HOR elections held between 2012 and 2021.

Downloaded from https://www.cambridge.org/core. Oxford Union Society, on 11 May 2025 at 21:01:11, subject to the Cambridge Core terms of use, available at https://www.cambridge.org/core/terms. https://doi.org/10.1017/9781009588522.002

Table 2.3 *Share of seats (in bold) and votes (in parentheses) captured by parties in Japan's Lower House elections, 2012–2021. Under the total share of seats won, the numbers on the left pertain to seats and votes in the proportional representation tier, while those on the right pertain to seats and votes in the single-seat district tier.*

	2012		2014		2017		2021	
LDP	**61.3**		**60.4**		**60.4**		**55.7**	
	31.7 (27.6)	**79.0** (43.0)	**37.8** (33.1)	**74.0** (48.1)	**37.5** (33.3)	**74.4** (47.8)	**40.9** (34.7)	**64.7** (48.0)
Your Party	**3.8**							
	7.8 (8.7)	**1.3** (4.7)						
SDP	**0.4**		**0.4**		**0.4**		**0.2**	
	0.6 (2.7)	**0.3** (0.8)	**0.6** (2.5)	**0.3** (0.8)	**0.6** (1.7)	**0.3** (1.2)	**0** (1.8)	**0.3** (0.5)
DPJ	**11.9**		**15.2**					
	16.7 (16.0)	**9.0** (22.8)	**19.4** (18.3)	**12.7** (22.5)				
TPJ	**1.9**							
	3.9 (5.7)	**0.7** (5.0)						
CDP					**11.6**		**20.6**	
					21.0 (19.9)	**5.9** (8.5)	**22.2** (20.0)	**19.7** (30.0)

(continued)

Downloaded from https://www.cambridge.org/core. Oxford Union Society, on 11 May 2025 at 21:01:11, subject to the Cambridge Core terms of use, available at https://www.cambridge.org/core/terms. https://doi.org/10.1017/9781009588522.002

Table 2.3 *(continued)*

	2012		2014		2017		2021	
Hope/DPP					**10.8**		**2.4**	
					18.2	**6.2**	**2.8**	**2.0**
					(17.4)	(20.6)	(4.5)	(2.2)
Komeito	**6.5**		**7.3**		**6.2**		**6.9**	
	12.2	**3.0**	**14.4**	**3.0**	**11.9**	**2.8**	**13.1**	**3.1**
	(11.8)	(1.5)	(13.8)	(1.5)	(12.5)	(1.5)	(12.4)	(1.5)
JCP	**1.7**		**4.4**		**2.6**		**2.2**	
	4.4	**0.0**	**11.1**	**0.3**	**6.3**	**0.3**	**5.1**	**0.3**
	(6.1)	(7.9)	(11.4)	(13.3)	(7.9)	(9.0)	(7.2)	(4.6)
JRP/JIP/Ishin	**11.3**		**8.5**		**2.4**		**8.8**	
	22.2	**4.7**	**16.7**	**3.7**	**4.5**	**1.0**	**14.2**	**5.5**
	(20.4)	(11.6)	(15.7)	(8.2)	(6.1)	(3.2)	(14.0)	(8.4)
Other	**1.2**		**3.8**		**5.6**		**3.2**	
	0.5	**2.0**	**0.0**	**6.0**	**0.0**	**9.1**	**1.7**	**4.2**
	(1.0)	(2.7)	(5.7)	(5.6)	(1.2)	(8.2)	(1.6)	(4.8)
Total	**480**		**475**		**465**		**465**	
	180	**300**	**180**	**295**	**176**	**289**	**176**	**289**

The total share of seats won by each party appears in bold above each bar. Below this, the party's seat share in the PR (left) and SSD (right) tiers appears in bold. Below that, in parentheses, is the share of votes the party won in the PR (left) and SSD (right) tiers. Parties are CDP (Constitutional Democratic Party); Hope (Party of Hope); Democratic Party for the People (DPP); TPJ (Tomorrow Party of Japan or Nihon Mirai no To); JRP/JIP/Ishin refers to the Japan Restoration Party (2012), the Japan Innovation Party (2014), and Ishin (2017 and 2021). Other includes PNP (2009), PFG and PLP (2014), Party for Japanese Kokoro and Liberals (2017), and Reiwa Shinsengumi (2021), as well as other minor parties and Independents.

Downloaded from https://www.cambridge.org/core. Oxford Union Society, on 11 May 2025 at 21:01:11, subject to the Cambridge Core terms of use, available at https://www.cambridge.org/core/terms. https://doi.org/10.1017/9781009588522.002

The format is the same as Table 2.2. The first column shows that the 2012 election saw a decisive reversal of fortunes for the LDP: It captured 61.3% of seats, while the DPJ was reduced to just 11.9%. Going into the election, the LDP had 118 seats. Coming out, it had 294, a gain of 176 seats. While the LDP had won only 64 SSDs in 2009, it walked away with 237 in 2012, a gain of 173 SSDs. Furthermore, the LDP–Komeito coalition together captured more than two-thirds of seats in the Lower House, which gave it the ability to override any potential veto from the Upper House. The DPJ, on the other hand, was reduced to only fifty-seven HOR seats, which was only two in excess of the third-largest party, the JRP, which won fifty-five. The TPJ, comprised mostly of recent DPJ defectors, did badly, managing only nine seats.

During the 2012 campaign, the LDP made addressing stagflation (the economic stagnation and deflation that had plagued Japan for more than a decade) the centerpiece of its campaign. Immediately afterward, the new Prime Minister Abe Shinzo took steps to implement two of the three arrows in his economic policy, which would later become known as Abenomics (Hoshi and Lipscy 2021). The first was quantitative easing, which involved instructing the Central Bank to set a 2% inflation target, to be achieved through the purchase of government bonds and other assets. The second was fiscal stimulus, to be financed with the extra money provided by the easy monetary policy (Noble 2016; Tiberghien 2013). A key aspect of this stimulus was construction spending to increase the country's resilience to natural disasters. The stock market rallied temporarily, although other economic indicators in the run-up to the July 2013 Upper House election were less positive. Coming only a short time after the LDP had regained control of government in December, this election promised to determine whether or not the LDP-led coalition would face a "divided Diet" for the remainder of its term, just as the DPJ had done between 2010 and 2012, and the LDP had done between 2007 and 2009, respectively (Thies and Yanai 2013). Helped by the continued unpopularity of the DPJ, fragmentation in the opposition, and low turnout, an indication that voters without partisan attachments were staying at home, the LDP won a comfortable victory, increasing its seat share from 35% of Upper House seats to 48%. The share controlled by the DPJ fell from 36% to 24% (Pekkanen, Reed and Scheiner 2016).

Coming a year and a half after the July 2013 Upper House election, the December 2014 Lower House election took many by surprise. In the wake of the LDP's 2013 election victory, the Abe government had enacted a Special Secrets Law, revised a prohibition on arms exports, and declared that the longstanding interpretation that Article 9 of Japan's constitution prohibited the exercise of collective self-defense, which was Japan's

Downloaded from https://www.cambridge.org/core. Oxford Union Society, on 11 May 2025 at 21:01:11, subject to the Cambridge Core terms of use, available at https://www.cambridge.org/core/terms. https://doi.org/10.1017/9781009588522.002

right under the United Nations Charter, would be overturned (Pekkanen and Pekkanen 2015; Repeta 2014). Being unpopular, these policies sparked demonstrations attended by scores of thousands. In April 2014, the scheduled increase in the consumption tax (from 5% to 8%) took place. The product of a decision made two years earlier, under the DPJ government, this led to a contraction in Japan's GDP, prompting the public to exhibit misgivings about Abenomics. Public opinion polls showed that a majority continued to have hope for Abenomics, but an even larger majority reported that they had not personally experienced any tangible benefits from it (Maeda 2016). Despite this, none of the opposition parties were able to present a compelling counterproposal or capitalize on public discontent with other aspects of Abe's agenda (Noble 2016). Suddenly, in November 2014, Abe dissolved the House and called an election. His reasoning was that he was seeking a mandate for his decision to delay the next scheduled increase in consumption tax (from 8% to 10%) from April 2015 to April 2017.

Pekkanen, Reed and Scheiner (2016) argue that two calculations influenced Abe's decision. One was his desire to take advantage of the fact that the opposition was in the process of reconsolidating. The other was his desire to forestall a *within*-party challenge, which could emerge now that the gains from Abenomics appeared smaller than projected. With regard to the opposition, the TPJ had reverted back to the name used upon its formation in 2012 (prior to installing Kada as its head): the PLP. Your Party (YP) had suffered rifts that led to the formation of a splinter party, the Unity Party, and its eventual dissolution in 2014. The JRP had also split, with one faction leaving and calling itself the Party for Future Generations (PFG) and another merging with YP's splinter Unity Party to form the Japan Innovation Party (JIP) (Pekkanen and Reed 2016). In the December 2014 election, Table 2.3 shows that the LDP captured a seat share that was similar to its 2012 share: 60.4%. The next-largest party, the DPJ, managed just 15.2% of seats. Between them, the Third Force parties managed only 9.4% of seats (down from 17% in 2012), nearly all of which were captured by the JIP. The PFG and PLP were decimated, winning only two seats each.[6]

By early 2017, Prime Minister Abe was grappling with declining approval ratings as two instances in which conservative-leaning educational institutions had been given preferential treatment with regard to land sales, allegedly on account of personal connections to the prime minister, came to light. At the same time, scandals involving members of the "friends and ideological allies" Cabinet Abe had put together in

[6] These parties are in the Other category in the table.

Downloaded from https://www.cambridge.org/core. Oxford Union Society, on 11 May 2025 at 21:01:11, subject to the Cambridge Core terms of use, available at https://www.cambridge.org/core/terms. https://doi.org/10.1017/9781009588522.002

the wake of his 2016 Upper House victory were also receiving media coverage (Carlson and Reed 2018*b*). Against this background, the newly elected governor of Tokyo, former LDP-affiliated Lower House Member Koike Yuriko, announced that she was forming a new party to challenge the LDP's majority party status in the Tokyo Metropolitan Assembly. She called this party Tokyoites First. In a blow to the LDP, Koike convinced the Tokyo branch of the LDP's coalition partner, the Komeito, to abrogate its electoral coordination with the LDP in the upcoming July 2017 Tokyo Assembly election and coordinate with Tokyoites First instead. This strategy was a resounding success: Tokyoites First won a plurality of assembly seats, while the LDP lost more than half the seats it had going into the election. Koike made no secret of the fact that she intended to take her party to the national level and compete in the next Lower House election.

Between 2014 and 2017, the opposition reconstituted itself again. Despite being decimated in the 2014 election, in its wake the PFG had rebranded itself as Party for Japanese Kokoro and the PLP had rebranded itself as the Liberals. The only opposition party that had done well in 2014, the JIP, ended up splitting in 2015 over whether or not to cooperate with the DPJ. The group that opposed cooperation became Initiatives for Osaka and then, in 2016, Nippon Ishin no Kai (JIP). The group in favor of cooperation ended up merging with the DPJ in 2016. Calling itself the DP, this new entity carved out a plan to cooperate with Japan's oldest opposition party, the JCP, in the upcoming election. It had tried out this strategy in the 2016 Upper House election and determined that it had gone well (Pekkanen and Reed 2018).

In September 2017, North Korea launched a missile over Japanese territory. Abe, who had attempted to build a relationship of trust with United States President Donald J. Trump since the latter's election the previous November, decided to dissolve the House and call for an election. Much like in 2014, he told voters that he needed a mandate to deal with the security concerns posed by North Korea and decide how to allocate revenue generated from the consumption tax hike (Scheiner, Smith and Thies 2018; Smith 2018*c*). Soon after this announcement, Koike (Tokyoites First leader) announced that she was forming a new party called the Party of Hope. The DP leader, Maehara Seiji, announced that the DP would not endorse candidates in the election and instead, DP members would be encouraged to seek endorsement from Hope. Immediately after this announcement, Koike, who declined to resign from the governorship while leading the new party, announced that any DP lawmaker seeking Hope's endorsement had to publicly pledge to support the party's policies, which included constitutional revision. These preferences reflected greater partisan alignment with the LDP, which is a conservative party, than with

Downloaded from https://www.cambridge.org/core. Oxford Union Society, on 11 May 2025 at 21:01:11, subject to the Cambridge Core terms of use, available at https://www.cambridge.org/core/terms. https://doi.org/10.1017/9781009588522.002

the more liberal opposition parties. These demands led to the creation of *another* new party at the eleventh hour, the Constitutional Democratic Party (CDP), which was comprised of those DP members who opposed constitutional revision (Pekkanen and Reed 2018).

For the LDP, the results of the 2017 election were nearly a carbon copy of the 2014 election (Scheiner, Smith and Thies 2018, 46). Despite a loss of ten seats between the two elections due to redistricting (four in PR and six SSDs), the LDP won a seat share of 60.4% seats, eerily similar to its seat share in 2014. The share of votes it won in the SSD and PR tier, respectively, were within 1 percentage point of the party's 2014 shares. Hope, which had tried to coordinate with JIP in the SSD tier, managed only 10.8% of seats. The CDP, which pursued what ended up being a relatively successful coordination effort with the JCP (and to a lesser extent, with the SDP), won 11.6% of seats, eclipsing Hope to become the second-largest party (Scheiner, Smith and Thies 2018). Another twenty-six SSDs were won by independents, many of whom were former DP lawmakers who had elected not to join either Hope or the CDP.

As with the 2012 and 2014 elections, the aftermath of the 2017 election saw yet another reconstitution of the party system. The DP had not formally disbanded in 2017, when it said it would not run any official candidates in the Lower House election. This is because it had Upper House lawmakers. In April 2018, DP-affiliated Upper House Diet Members decided to merge with Hope's lawmakers in the Lower House and call the new party the Democratic Party for the People (DPP). A year later, the Liberal Party (formerly the PLP) dissolved, with its members joining the DPP. Then, in August 2020, the leaders of the DPP and CDP agreed to merge, with the reconstituted entity to be named the CDP (Sugiyama 2020). As with prior attempts at merging, select DPP members declined to join the new party, preferring to remain as a separate party under the DPP moniker. After this merger, the CDP became the second-largest party in the Lower House, controlling 110 seats.

The beginning of 2020 saw the onset of the COVID-19 pandemic. The government closed schools and asked people to stay home and businesses not to open. Economic growth, which under Abe had been on a slightly upward trajectory, contracted significantly as businesses recorded fewer profits, so cut work hours and wages, households cut consumption, inbound tourism collapsed with new restrictions on the entry of non-Japanese nationals, and demand for Japanese products abroad declined. Even though his government enacted two supplementary budgets, designed to help blunt the need for layoffs and keep businesses and individuals afloat, Prime Minister Abe's support rate steadily declined. In August 2020, he suddenly declared that he was stepping down from

Downloaded from https://www.cambridge.org/core. Oxford Union Society, on 11 May 2025 at 21:01:11, subject to the Cambridge Core terms of use, available at https://www.cambridge.org/core/terms. https://doi.org/10.1017/9781009588522.002

his position as the prime minister (and by default, LDP president). The party held an election to decide who would serve out the remaining year of Abe's three-year term, and in it, LDP-affiliated Diet members elected Suga Yoshihide (Liff 2021).

Despite his close association with former Prime Minister Abe, who became the longest-serving prime minister in Japan's history a few weeks before his resignation, and pledge to continue the policies of his predecessor, Suga's support rate fell steadily, as public consternation with pandemic-imposed restrictions, the slow vaccine roll-out, and rising case counts grew. Support for Suga's administration reached a low ebb during a "fifth wave" of infections in summer 2021, during which time the government persisted in holding the Tokyo Olympics, which had been postponed from 2020 (Liff 2022). This prompted Suga to declare that he would not run in the next LDP leadership election, slated to choose a leader for a new three-year term. In September 2021, LDP-affiliated Diet members elected Kishida Fumio in his place. Kishida immediately dissolved the Lower House and called for an election.

Unlike the 2014 and 2017 elections, the 2021 election occurred at the very end of Members' constitutionally mandated four-year term. Having set expectations that the party's seat share would be on the low side, given the pandemic, the LDP still managed to walk away with 55.7% of seats (Maeda 2023). This represented a loss of fifteen seats, but it was still a comfortable majority. Going into the election, the reconstituted opposition comprised the CDP, JCP, JIP, and DPP, respectively. The CDP captured 110 seats, the JCP captured 12 seats, the JIP captured 11 seats, and the DPP captured 8 seats, respectively (Pekkanen and Reed 2023). The CDP and JCP had coordinated their SSD candidacies to avoid running against each other. This strategy ended up being less successful than either party had hoped and both parties lost seats. The JIP, on the other hand, saw its seat tally triple to forty-one seats, which put it in the position of second-largest opposition party. The JIP's support has always been heavily concentrated in the Osaka region, where it emerged, and of the fifteen Osaka-based SSDs in which it fielded candidates, it won all of them.

2.1.3 *Untouched by Post-2012 Party System Transformation*

Figure 2.1 chronicles the transformations in Japan's party system that have occurred since 1955. The tree begins on the left with the LDP, JSP, and JCP, each of which existed in 1955. The year of each party's formation or dissolution appears in smaller text outside the boxes. The Komeito was formed in 1964 and divisions in the JSP's ranks produced the DSP

Downloaded from https://www.cambridge.org/core. Oxford Union Society, on 11 May 2025 at 21:01:11, subject to the Cambridge Core terms of use, available at https://www.cambridge.org/core/terms. https://doi.org/10.1017/9781009588522.002

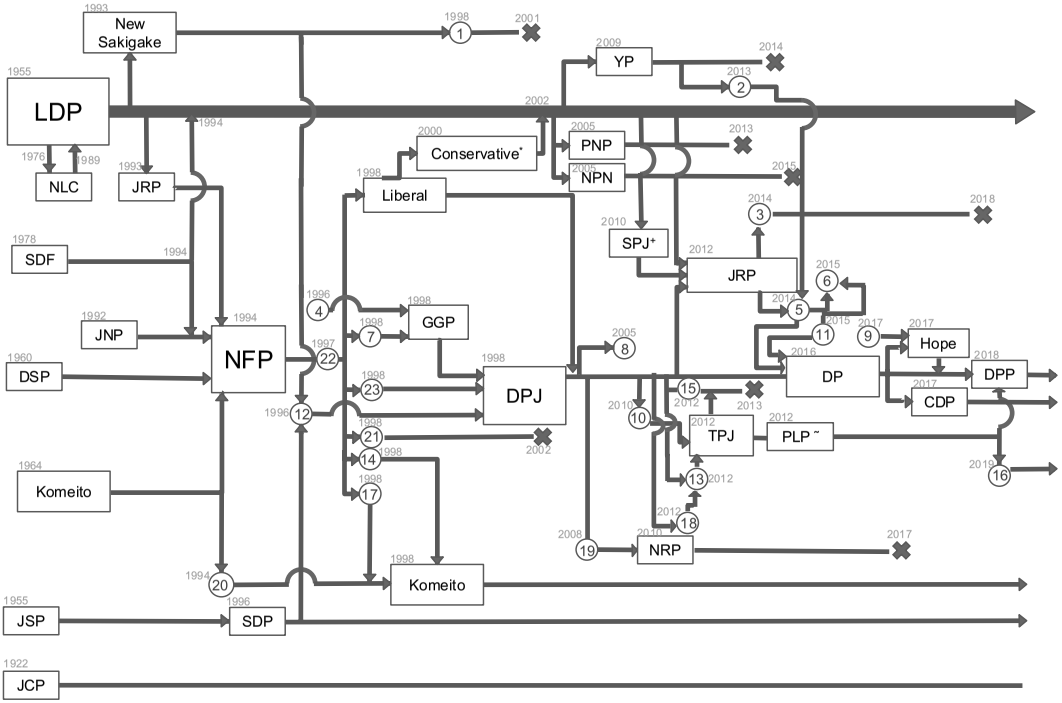

Figure 2.1 Tree depicting the transformation of Japan's party system, 1955–2018. The year of each party's formation or dissolution appears in smaller text outside the boxes.
See Figure A.2 for a key to the parties represented by numbers in the circles. See Figure A.1 for the party tree in Japanese.

Downloaded from https://www.cambridge.org/core. Oxford Union Society, on 11 May 2025 at 21:01:11, subject to the Cambridge Core terms of use, available at https://www.cambridge.org/core/terms. https://doi.org/10.1017/9781009588522.002

in 1960 and the Socialist Democratic Federation (SDF) in 1978, respectively. Moving slightly to the right, the Japan Renewal Party, JNP, and Sakigake were formed in the early 1990s. After the electoral reform in 1994, the JSP changed its name to the SDP and the NFP was formed. The DPJ was formed in advance of the 1996 election, but refounded itself in 1998 under the same label after the NFP collapsed. The NFP's collapse in 1997 begat the formation of the Liberals, and later, the Conservatives. It also led to the reemergence of Komeito (technically under the name New Komeito). In the 2000s, smaller parties were formed when LDP politicians disapproved of Prime Minister's Koizumi's postal privatization plan and defected from the LDP. Then, the formation of several new parties in 2012, and the subsequent splintering of the DPJ, are depicted on the right-hand side of the figure. The tree makes it clear that the LDP, depicted by the large square at the top, has remained completely aloof from the transformation in the party system that has occurred since 2012.[7]

2.2 ECLIPSING OTHER PARTIES IN SUPPORT

Election results are the product of an electoral system that converts votes cast for parties into seats for those parties. Because electoral systems have biases, and voters have a sense of those biases when casting their votes, I supplement the above discussion with data on voter *attitudes* toward the different parties. This table is based on Jiji Press data provided by Kenneth McElwain.[8] Every month, Japan's Jiji Press conducts a survey on a nationally representative sample of 3,000 Japanese citizens of voting age. Examining the share of voters selecting the LDP relative to other parties provides more information as to the sheer dominance of the LDP, and how that dominance has been consolidated in the post-2012 period.

The question we are interested in is "Which party do you support?" In Figure 2.2, the black line captures the percentage of respondents who selected "the LDP" between the forty years from August 1980 until March 2020. It is immediately apparent that, for all its strength in elections, the LDP is not a particularly *popular* political party. The average percentage of respondents who say they support the LDP in this period was 25.8%. This number reached its zenith at 40.2% in December 1991 and its lowest ebb at 11.7% in March 2012. The former occurred immediately after the inauguration of the government of Miyazawa Kiichi, while the latter occurred while the LDP government was negotiating with the DPJ government over a planned increase in the consumption tax. Of

[7] Figure A.1 presents the same figure in Japanese, and Figure A.2 presents a key to the English and Japanese names of parties represented by numbers in the circles.

[8] For more information on this data, see Matsumoto et al. 2024.

Downloaded from https://www.cambridge.org/core. Oxford Union Society, on 11 May 2025 at 21:01:11, subject to the Cambridge Core terms of use, available at https://www.cambridge.org/core/terms. https://doi.org/10.1017/9781009588522.002

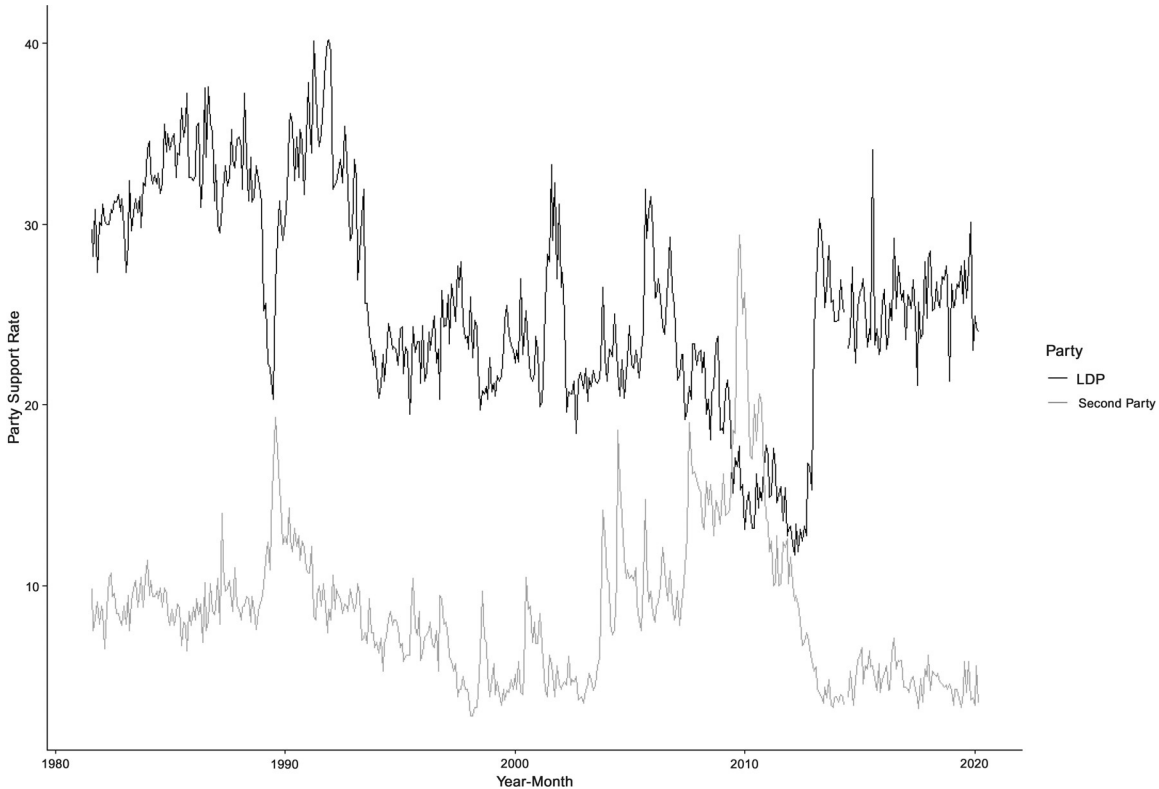

Figure 2.2 Public support for LDP and second most-supported party, 1980–2020 (Jiji Survey Data)

Downloaded from https://www.cambridge.org/core. Oxford Union Society, on 11 May 2025 at 21:01:11, subject to the Cambridge Core terms of use, available at https://www.cambridge.org/core/terms. https://doi.org/10.1017/9781009588522.002

course, the strength of attachment voters feel to political parties is a function of many context-specific factors that make it difficult to generalize from. Thus, our interest here is less in the *absolute* level of support the LDP commands in these surveys and more in the *relative* level of support it commands.

The gray line depicts the percentage of respondents who selected the second-most-selected party in each month. To construct this, I took the percentages of respondents who supported each of the *n* non-LDP parties that existed in any given month, and I plotted the maximum of those percentages. Thus, the gray line depicts how much support the second-most-supported party commanded each month.[9] If the LDP commands a surprisingly small share of popular support, given its electoral prowess, the opposition party best poised to take over from the LDP commands an *abysmally small* share of popular support. Across the whole period, the second-most popular party commanded the support of, on average, just 8% of survey respondents. Support for the second-most popular party reached its lowest ebb in February and March of 1998, when just 2.8% of respondents said they supported the second-most-supported party (the JSP) and its highest ebb in October 2009, just after the inauguration of the DPJ government, when 29.4% of respondents supported the second-most-supported party (the DPJ).

It will be immediately apparent that the *gap* between the black and gray lines depicts how much *more* support the LDP has commanded, relative to the next-most-supported party. On average, this gap has been large: 17%. However low the LDP's absolute level of support is, then, it is clear that its support vastly exceeds that commanded by any other party. Three distinct periods are discernible. In the first period, which pertains to the twenty-seven years between 1980 and 2007, the gap was, on average, 19.5%. There was a single month, July 1989, when the gap was only 3.7%, which occurred when a decidedly *unpopular* LDP leader was serving as the prime minister just as a very *popular* leader was at the helm of the JSP. Notice that this twenty-seven–year period includes

[9] For those interested, between 1980 and 1993, the second-most-supported party was the JSP. In August 1993, it became the newly established JNP. By November 1993, it was back to the JSP. The JSP continued to command the second-highest rate of support until the NFP was established in December 1994. For the near duration of the NFP's existence until its dissolution in December 1997, it was the second-most-supported party. Between January and June 1998, the second-most supported party oscillated between the JSP, the DPJ, and even the JCP. Then, for the next eighteen years, the second-most-supported party was almost always the DPJ, with the exception of several months in which it was the LDP's coalition partner, the Komeito. Between 2016 and 2017, it was the new party that formed after the DPJ dissolved, the DP. In 2017, the CDP was formed, after which this party has consistently captured the second-highest rate of support.

Downloaded from https://www.cambridge.org/core. Oxford Union Society, on 11 May 2025 at 21:01:11, subject to the Cambridge Core terms of use, available at https://www.cambridge.org/core/terms. https://doi.org/10.1017/9781009588522.002

the inauguration of the first non-LDP government in thirty-eight years (in August 1993). This occurred *without* noticeable changes in the support rates of either the LDP or second-most-supported party. This makes sense when we consider that this alternation in power did not occur through an election in which another party won more seats than the LDP.

In the second period, which extends from 2007 until 2013, the DPJ grew in popularity and eventually superseded the LDP in public support for just over a year between 2009 and 2010. In the 2007–2013 period, the gap was, on average, a much smaller 3.2%. In the third period, however, which extends from 2013 until 2020, the gap has shot back up to 21.2%. In this period, the average level of support commanded by the second-most supported party has been a measly 4.6%, while the average level of support commanded by the LDP has been 25.8%. Looking at these figures and considering the trajectories of the numerous new parties that have been formed since 2012, it is hard to imagine the LDP being unseated by a single opposition party in the immediate future.

2.3 ELECTORAL INSTITUTIONS ADVANTAGE THE LDP?

While numerous factors have contributed to the LDP's electoral dominance, we can distil many of these factors into three main categories. The first draws attention to the ways in which the two electoral systems used to select Lower House Members have advantaged the LDP at the expense of other parties. How?

First, let us take the electoral system used for the Lower House until 1993: single nontransferable vote in multimember districts (SNTV-MMD). Under SNTV-MMD, recall that Japan was divided into between 118 and 131 multimember electoral districts, from which three, four, or five candidates were elected. Generally speaking, political scientists have shown that the number of serious competitors in any given electoral district tends to be one *more* than the number of candidates elected, meaning that an electoral district electing five people will likely see six serious competitors, and so on (Cox 1997; Reed 1990; Duverger 1963). When competition is between four, five, or six serious candidates in a given district, it follows that each candidate will end up needing a relatively *small* share of the vote to be elected. The share can be even smaller when the district attracts nonserious competitors. In an electoral district with five winners (and six serious competitors), for example, candidates can win seats with just 10–15% of votes cast (Bouissou 1999).

In this setting, parties essentially face a choice: They can remain small, which means avoiding intraparty competition but forgoing the chance to

Downloaded from https://www.cambridge.org/core. Oxford Union Society, on 11 May 2025 at 21:01:11, subject to the Cambridge Core terms of use, available at https://www.cambridge.org/core/terms. https://doi.org/10.1017/9781009588522.002

govern, or they can try to be large, which means grappling with intraparty competition but potentially gaining control of government. When a party is content with being small, it can run a single candidate in each electoral district and tailor its platforms to attract approximately 15% of voters in each district. By not running more candidates, it ensures it will never be majority-seeking, thus forgoing the opportunity to capture a majority and control government, at least by itself. However, it can avoid having its candidates campaign against each other, which can give rise to serious internal disagreement. As a result, the party can remain unified.

As soon as a party has ambitions of controlling government, however, then under SNTV-MMD it has to run more than one candidate in many (if not all) electoral districts. This means it has to find a way for its candidates to compete against each other in a relatively "safe" manner, meaning in a manner that does not create divisions between party members that could threaten its hold on power, were it to reach this point. Whereas in some political systems, disagreements between members of the ruling party might be less consequential, in a parliamentary system like Japan's, the prime minister governs with the confidence of the majority party. Hence, disagreements within the ruling party can prove fatal, in the sense of bringing down government or leading to a new election in which one's career as a lawmaker could come to an end. Under SNTV-MMD, then, majority-seeking parties are buffeted by two conflicting pressures. One, emanating from the bottom (electoral system) up, encourages parties to stay small and the party system to *fragment*. Another pressure, emanating from the top (constitutional structure) down, encourages parties to enlarge themselves and *unify* (McCubbins and Rosenbluth 1995; Ramseyer and Rosenbluth 1993).

A key explanation for LDP dominance under this electoral system holds that the LDP was better able to manage these countervailing pressures than parties in the opposition. Why? Because of its control of central government resources. Specifically, this explanation holds that in the years after its inception, the party decided to allow its members access to central government resources, which they could use to carve out personal bailiwicks in their electoral districts that could then be relied on to get out the vote on election day (Krauss and Pekkanen 2010; Hirano 2006; Tatebayashi 2004; Fukui and Fukai 1999; Bouissou 1999; McCubbins and Rosenbluth 1995; Ramseyer and Rosenbluth 1993). As long as a lid was kept on the *total* amount of particularistic spending inserted into the budget each year, the idea was that the party allowed this spending on the grounds that having members from the same district competing against each other with particularism posed less of a threat to party unity and government stability than competition over programmatic policies

Downloaded from https://www.cambridge.org/core. Oxford Union Society, on 11 May 2025 at 21:01:11, subject to the Cambridge Core terms of use, available at https://www.cambridge.org/core/terms. https://doi.org/10.1017/9781009588522.002

(Catalinac 2015). Having candidates in the same electoral district dueling over national security or judicial reform was deemed risky, as it could too easily spiral into a situation where efforts by one LDP lawmaker to realize her election promises clashed with the efforts of another to realize theirs (Catalinac 2016; Estevez-Abe 2008). Policy clashes of this kind were what could stymie decision-making and create legislative stalemates that could end in the dissolution of parliament. Granting party members the ability to discern which types of infrastructure and other projects were of greatest interest to groups of constituents and deliver those projects was deemed the safer choice.

Critically, this was a choice available to the LDP because of its control over central government resources. Because none of the opposition parties had such access, they did not have this option. In the event that all four of them decided to come together and contest the election as one big opposition party, or in the event that one of the parties decided to field enough candidates to qualify as majority-seeking, this new party would not have had such a convenient means of coping with the divisions within the party that would inevitably crop up. It is not hard to see how, for the *non*-LDP parties, competing *separately*, for 15% of voters in each electoral district, was an attractive choice. Maeda (2012) shows that this choice was in keeping with the preferences of individual members of the largest non-LDP party, the JSP, who did not want the inconvenience of another JSP candidate in their electoral district. The fact that the LDP had a ready means of *solving* the challenges emanating from the conflicting pressures emanating from the combination of SNTV-MMD and Japan's constitutional structure, while opposition parties did not, and instead stayed divided and competed on the ideological fringes, led scholars, pundits, and even Diet Members to fear that under SNTV-MMD, a second majority-seeking party might never emerge.

Toward the end of the 1980s and in the early 1990s, the impediments to the emergence of a second majority-seeking party mixed with other arguments about the pathologies of SNTV-MMD to build public support for reforming the electoral system (Reed and Thies 2001; Curtis 1999). One was the fact that each candidate needed such a small share of votes in each district that they designed their platforms to target relatively *narrow* segments of the electorate (Catalinac 2018). Another was the fact that basing one's election campaign around what could be done for one's constituents, as LDP candidates did, ended up requiring considerable financial outlays, which made corruption more attractive than it might otherwise be (Carlson and Reed 2018*a*; Nyblade and Reed 2008; Otake 1996). It also inclined LDP candidates toward policies that benefited

Downloaded from https://www.cambridge.org/core. Oxford Union Society, on 11 May 2025 at 21:01:11, subject to the Cambridge Core terms of use, available at https://www.cambridge.org/core/terms. https://doi.org/10.1017/9781009588522.002

narrow segments of the electorate, over policies that helped broad swaths of the electorate (Catalinac 2015). In the series of events chronicled above, the opposition parties, helped by LDP defectors, eventually took power and reformed the electoral system. However, it took *fifteen* years for a party other than the LDP to win a plurality in a Lower House election. Why? What took so long?

It turns out that, far from obliterating the advantages enjoyed by large parties, the new MMM electoral system introduced new ones. Three in particular stand out. First, recall that MMM combines an SSD tier with a PR tier and makes a party's seat tally the sum of those it wins in both tiers. Under this system, it turns out that parties are buffeted by countervailing pressures reminiscent of those bequeathed by the combination of SNTV-MMD with Japan's constitutional structure prior to 1994. What are these?

To begin with, to win seats in the SSD tier, parties have incentives to transform themselves into two blocs, each of which runs a single candidate in each SSD (Duverger 1963). Because there can only be one winner, these two blocs have incentives to choose candidates with the highest chance of winning and concentrate all available resources on this candidate's campaign. These two candidates, in turn, have incentives to position themselves at the *center* of the ideological spectrum, with one slightly to the right and the other slightly to the left. In doing so, both candidates can guarantee themselves the votes of all voters on their respective "side" of the spectrum (Downs 1957). Importantly, in this setting, candidates can be harmed by the emergence of additional candidates on their respective "side": New candidates emerging on the left, for example, might siphon votes away from the candidate positioned at center-left. This would hand an easy victory to the candidate positioned at center-right.

Thus, the existence of an SSD tier, combined with the fact that a large party (the LDP) already existed when MMM was introduced, gives non-LDP parties strong incentives to join forces and *unify*. Without joining forces and getting behind a single candidate in each SSD, the opposition parties stand little chance of defeating the LDP's SSD candidate. However, the addition of a PR tier, and the mechanics of how votes are converted into seats in that tier, generate a countervailing pressure on non-LDP parties to *fragment*. Why? PR tiers allow parties to compete as separate entities, secure in the knowledge that as long as they win some votes, they will win some seats. While competing separately might be counterproductive from the perspective of winning SSDs – and hence, capturing a governing majority – the fact that it is possible for parties to win seats by

Downloaded from https://www.cambridge.org/core. Oxford Union Society, on 11 May 2025 at 21:01:11, subject to the Cambridge Core terms of use, available at https://www.cambridge.org/core/terms. https://doi.org/10.1017/9781009588522.002

competing separately, whereas it would be considerably less possible if the electoral system was comprised solely of SSDs, creates a countervailing force encouraging these parties to fragment (Scheiner 2006, 187).

To make matters worse, once a party in the opposition has weighed up these trade-offs and decided against teaming up with other opposition parties to compete under the banner of a single, unified opposition party, then it is likely to realize that fielding SSD candidates can be beneficial, even when they have no chance of winning. This is because parties typically win more PR votes in SSDs where they field SSD candidates. This is thought to be because even when those candidates have no chance of winning their SSD, their campaign activities therein contribute to publicity for the party that pays off in PR votes (Cox and Schoppa 2002; Sugawara 2002).

What this means is that once an opposition party has decided to compete separately, thereby forgoing the opportunity to create a unified opposition party capable of winning SSDs, then it has incentives to engage in behavior that boosts its own PR votes but makes it more likely that the large party's candidate positioned on the *opposite* side of the ideological center emerges victorious. In Japan, this dynamic plays out to the advantage of the LDP because the LDP positions itself at center-right, while most of the opposition parties position themselves on the left (Catalinac 2018). Paradoxically, then, whenever an opposition party eschews coordination with other opposition parties and fields its own candidate, the presence of that candidate ends up creating a playing field that is highly advantageous for the LDP. Intuitively, this is because the opposition candidates usually position themselves on the left, which limits them to voters on the left. This hands the LDP candidate, usually located at center-right, an easier victory than a situation in which her rival had been a single opposition-supported candidate located right next to her, at center-left.

Generally speaking, elections after 1994 have featured SSDs where LDP candidates face multiple opposition candidates and win with relatively small shares of the vote. In the 1996 election, Table 2.2 shows that SSD candidates from the LDP captured an average of 38.6% of votes cast. Yet, helped by the fact that non-LDP votes were split across multiple candidates, this translated into victory in 56.3% of SSDs. The largest discrepancy between votes and seats occurred in the 2012 election, in which LDP candidates won an average of 43% of votes in each SSD, yet walked away with 79% of SSDs. This election occurred after defections from the ruling DPJ resulted in the creation of new parties, which together with one older party (YP), were referred to as the Third Force. In the vast majority of SSDs, competition between two serious

Downloaded from https://www.cambridge.org/core. Oxford Union Society, on 11 May 2025 at 21:01:11, subject to the Cambridge Core terms of use, available at https://www.cambridge.org/core/terms. https://doi.org/10.1017/9781009588522.002

contenders in the 2009 election became competition between three, four, or five contenders. Reed et al. (2013) show that increases in number of SSD candidates between 2009 and 2012 were associated with lower vote shares for both the LDP and DPJ candidates, but the effect for DPJ candidates was nearly twice that for LDP candidates. According to Scheiner, Smith and Thies (2016), in the 211 SSDs that saw a DPJ and a Third Force candidate, had all the votes cast for these candidates been cast for a *single* opposition candidate, then absent other changes in voter preferences or proclivity to vote, the LDP would have won 112 fewer SSDs. Considering that the LDP's seat tally was 294, a loss of 112 would have left it with a seat share of only 37.9%, considerably less than the majority it won (Scheiner, Smith and Thies 2016, 34).

It is clear that the fragmentation effect of the PR tier in an MMM electoral system advantages the LDP. However, that is not all. The LDP has found at least two other ways to use the PR tier to its advantage. One, recall that in the PR tier, parties present voters with "closed" lists of candidates and voters vote for one list. What "closed" means is that parties decide ahead of time which candidates will be on the list and what rank candidates will be placed at. Seats accrue to parties in proportion to the share of PR votes obtained in each bloc, meaning that a party capturing 30% of PR votes in a given bloc is entitled to roughly 30% of available seats in that bloc. Critically, parties assign the number of seats they are owed to candidates in the order they appear on the list, meaning that a party whose vote share entitles it to four seats in a given bloc will assign those to the candidates ranked at the first, second, third, and fourth positions on the list, respectively. Because candidates at higher ranks have a higher chance of winning seats, candidates prefer to be listed as highly as possible.

After the introduction of MMM, LDP leaders devised a way of using their control over list placements to motivate their SSD nominees to campaign as hard as possible. How? Under Japan's version of MMM, candidates are allowed to be dual-listed in both tiers. When a candidate is dual-listed, this means that she is the party's designated nominee in a given SSD *and* appears on the party list in the PR bloc housing that SSD. The LDP decided that as a general rule, its SSD nominees would be dual-listed in the PR tier and placed at the *same* rank on the list (McKean and Scheiner 2000). After the election, candidates who won their SSD would be struck from the list and the remaining candidates, who lost their SSD, would be reranked in accordance with how closely they lost. This rule has the effect of increasing campaign effort from the party's SSD nominees, even when those nominees have little chance of victory (Christensen and Selway 2017; Reed and Shimizu 2009; Reed 2007; Bawn and Thies

Downloaded from https://www.cambridge.org/core. Oxford Union Society, on 11 May 2025 at 21:01:11, subject to the Cambridge Core terms of use, available at https://www.cambridge.org/core/terms. https://doi.org/10.1017/9781009588522.002

2003). It also means that when an opposition candidate wins an SSD, she can enter parliament only to find her same-district LDP rival also there, presumably availing herself of all the advantages of incumbency and increasing her chances of ensuring the SSD swings back to her next time.

Two, Catalinac and Motolinia (2021*a*) highlight another way in which the presence of *separate* opposition parties, made possible by the PR tier, redounds to the benefit of the LDP. Essentially, the presence of these parties create an opportunity for the LDP's SSD candidates to craft mutually beneficial electoral coordination agreements, which can help them clinch victory. How? Above, I mentioned that the LDP formed a coalition government with a small party, the Komeito, in 1999. Since then, select LDP candidates have used this party's supporters as a crutch to win their SSD. Specifically, they ask the Komeito not to field a candidate in their SSD and instruct its supporters to cast their SSD votes for them (Liff and Maeda 2019). The presence of the PR tier makes this *possible*, on the one hand, by creating a playing field in which small parties like the Komeito are more likely to exist. They would be less likely to exist if the system was comprised only of SSDs. However, the PR tier also gives LDP candidates a *tool* they can use to make this deal more attractive to the Komeito: They can ask some of their supporters to cast their PR votes for the Komeito in return for receiving the SSD votes of Komeito supporters. For the LDP candidate, giving up PR votes in exchange for SSD votes, a relatively small number of which can be sufficient to put them over the finish line, is a highly beneficial trade (Catalinac and Motolinia 2021*a*).[10]

2.4 LDP'S POLICIES ARE MORE POPULAR?

We have seen how the electoral systems used to select Lower House Members have given the LDP an edge over other parties. In election after election, these electoral institutions have helped transform modest numbers of *votes* for the LDP into sizeable numbers of *seats*, sufficient to give it virtually uninterrupted control of Japan's government for the past sixty-nine years. The second and third category of explanations look beyond

[10] While not the focus of this discussion, the formula used to apportion seats in Japan's PR tier is a divisor-based one, d'Hondt. Gallagher (1991) illustrates that, among all formulae used to apportion seats in a PR system, d'Hondt advantages larger parties. Tables 2.2 and 2.3 reveal that larger parties tend to receive seat shares that exceed their vote shares in the PR tier too, while the reverse is true for smaller parties. In 2021, for example, the LDP won 34.7% of PR votes, but this translated into 40.9% of PR seats. In contrast, the JCP captured 7.2% of PR votes, which translated into just 5.1% of PR seats.

Downloaded from https://www.cambridge.org/core. Oxford Union Society, on 11 May 2025 at 21:01:11, subject to the Cambridge Core terms of use, available at https://www.cambridge.org/core/terms. https://doi.org/10.1017/9781009588522.002

institutionally derived advantages and focus on answering the question: Why do the millions of people who vote LDP do so?

One category of answers holds that voters choose the LDP because they prefer its policy positions, ideological orientation, image, or reputation to those of other parties.[11] Scholars have pointed out that the LDP has reaped electoral dividends from its effective stewardship of the economy, particularly during the high-growth years (Pempel 1998), its management of the US–Japan alliance during the Cold War (Curtis 1999), and the image of Prime Minister Koizumi Junichiro (2002–2006) as a reform-oriented leader committed to meeting the needs of urban voters (Uchiyama 2010; Kabashima and Steel 2007), respectively. Recently, Maeda (2016) shows that the post-2012 disarray in the opposition camp has meant a "there is no alternative (to the LDP)" logic has permeated public consciousness, contributing to LDP victories. Also on the programmatic dimension, Amano and Katada (N.D.) argue that the LDP's co-opting of innovative policy proposals advanced by opposition parties is an overlooked component of its electoral prowess.

While programmatic explanations for the party's dominance have been around for a long time, many scholars saw them as less decisive determinants of LDP election victories under the old electoral system, on the grounds that the intraparty competition faced by LDP candidates necessarily relegated policy-related factors to the sidelines. Why? While individual LDP candidates may have invoked the party's policies or reputation in their quest for reelection, these are factors *shared* between all LDP candidates in a district. By definition, factors shared between all LDP candidates in a district are not useful for convincing LDP-aligned supporters to choose one LDP candidate over the others (Catalinac 2016; Carey and Shugart 1995). It is on these grounds that distributive politics explanations for LDP election victories reigned supreme under SNTV-MMD, as channeling particularistic spending toward carefully demarcated groups of constituents was seen as offering a relatively safe way in which same-district LDP candidates could compete against each other (Krauss and Pekkanen 2010; McCubbins and Rosenbluth 1995; Cox and Niou 1994; Bouissou 1999; Ramseyer and Rosenbluth 1993). Because the introduction of MMM in 1994 resulted in the elimination of intraparty competition, it was seen as creating incentives for

[11] Political science research often separates a party's policy positions from any valence advantages it enjoys (e.g., Eshima et al. N.D.). Here, I lump policy positions and valence advantages together under the category of programmatic politics because my main purpose is to distinguish answers in this category from those in the distributive politics category, discussed below. There is also debate about the extent to which a valence advantage can be separated from policy positions.

Downloaded from https://www.cambridge.org/core. Oxford Union Society, on 11 May 2025 at 21:01:11, subject to the Cambridge Core terms of use, available at https://www.cambridge.org/core/terms. https://doi.org/10.1017/9781009588522.002

the main axis of competition to shift from revolving around distributive politics to revolving around programmatic politics.

The first few elections under MMM saw many signs of a shift to programmatic politics. In spite of the countervailing pressures placed on opposition parties by the combination of SSDs and PR, by 1998 a large opposition party had nevertheless emerged (the DPJ). Moreover, in the first few Lower House elections after its emergence, the percentage of SSDs seeing competition between two serious candidates progressively increased, as did the percentage of SSDs in which voters had a choice between "the government" (the LDP) and "the opposition" (the DPJ) (and critically, not between multiple candidates on either side) (Reed 2007). Correspondingly, elections started to turn on the popularity of a candidate's party and leader, rather than on candidate-specific characteristics such as seniority or local ties, which tended to determine victory under the old electoral system (McElwain 2012). Elections also started featuring manifestos produced by parties, which the media used to compare the priorities parties placed on different policy areas and their stances on those areas (Krauss and Pekkanen 2010). In my analysis of 7,497 election manifestos produced by the universe of LDP candidates competing in consecutive Lower House elections on either side of the 1994 reform, I found that the reform was associated with a decisive shift in discussion: In the three elections prior to reform (1986, 1990, and 1993), the average LDP candidate devoted approximately two-thirds of discussion to particularism (what I call "pork-barrel politics") and one-third to programmatic politics (what I call "policy"). In the five elections after reform, these proportions were reversed: The average LDP candidate devoted approximately two-thirds of discussion to programmatic politics and only one-third to particularism (Catalinac 2015).

The 2005 Lower House election offered a vivid example of what competition on programmatic politics looks like. To understand the circumstances surrounding this election, we must begin with the observation that the LDP has always been stronger in rural areas (Saito 2010; Scheiner 2005). One reason was because LDP governments were slow to address the fact that population changes had created marked disparities in the number of votes needed to elect a Diet Member across electoral districts. The failure to adjust the number of seats available in each district (either by increasing the number of seats in urban areas and decreasing them in rural ones) or redraw district boundaries created a situation where the number of votes required to elect a single Diet Member in a rural district could be as few as *half* those required to elect a single Diet Member in an urban district (Horiuchi and Saito 2003). The fact that it was considerably *easier* to win a seat in a rural area, combined with the fact

Downloaded from https://www.cambridge.org/core. Oxford Union Society, on 11 May 2025 at 21:01:11, subject to the Cambridge Core terms of use, available at https://www.cambridge.org/core/terms. https://doi.org/10.1017/9781009588522.002

that rural areas were needier, and tended to have greater *demand* for the pork-barrel projects LDP members could provide, meant that over time, the LDP developed relatively steadfast support in rural areas and less support in cities.

By redrawing the boundaries of Japan's electoral districts, the 1994 reform went a long way toward rectifying these vote-seat disparities (McElwain 2012). Conscious of the fact that there were now many more seats in urban areas, LDP Prime Minister Koizumi Junichiro (2001–2006) crafted policies designed to increase the party's appeal to urban voters. One of these was postal privatization, which promised to eviscerate the array of special benefits enjoyed by the so-called commissioned postmasters, individuals who played a key role mobilizing votes for LDP candidates in rural areas (Maclachlan 2006, 2004). Under the banner of liberalization, Koizumi also promised cuts to public works spending and agricultural subsidies and policies to encourage the amalgamation of smaller towns and villages, respectively (Reed, Scheiner and Thies 2012; Noble 2010). In 2005, however, Koizumi met with resistance from fellow LDP members over his postal privatization plan. He responded by dissolving the Lower House and calling for an election in the middle of Lower House Members' four-year terms. In the election, Koizumi declared that he was waging a war against what he called the forces of resistance (LDP members who had tried to block his privatization plan) (Reed and Shimizu 2009). He refused the party's nomination to these candidates and tried to reduce their chances of winning as independent candidates by hand-picking party-anointed "assassins" to run in their place (Nemoto, Krauss and Pekkanen 2008).

In doing so, Koizumi succeeded in making the 2005 election about a single idea (reform), and convincing people that a vote for an LDP candidate was "a vote for reform" (Reed, Scheiner and Thies 2012, 365). This strategy proved enormously successful: The LDP's seat share shot up to 61.7%, whereas the DPJ's decreased to 23.5%. Importantly, relative to the prior election in 2003, the gains made in 2005 were not very large in terms of votes, but because of the winner-take-all nature of SSDs, modest gains in votes translated into large gains in seats. The 2005 election saw the LDP increase its PR vote share from 35% to 38.2%, and its SSD vote share from 43.9% to 47.8%, respectively. Whereas the 3.2% increase in PR votes translated into a 4.5% increase in PR seats, the 3.9% increase in SSD votes translated into a 17% increase in SSDs won. In this way, the 2005 election was a reminder that when competition is between two serious competitors in an SSD, anything that can give one of those candidates an edge over the other is enough to swing the SSD their way. With his compelling programmatic message and broad public

Downloaded from https://www.cambridge.org/core. Oxford Union Society, on 11 May 2025 at 21:01:11, subject to the Cambridge Core terms of use, available at https://www.cambridge.org/core/terms. https://doi.org/10.1017/9781009588522.002

appeal, Koizumi provided this edge to all the LDP's candidates, thereby significantly increasing their chances of victory and the party's majority (Christensen 2006).

While the LDP's 2005 victory revealed the dividends of such a strategy, it did not stick to it. A year later, Koizumi stepped down and the party elected a new leader, Abe Shinzo (2006–2007). A decision Abe faced was what to do about the so-called "postal rebels": LDP politicians who had opposed postal privatization and been booted from the party, yet had run in the 2005 election as independents and won against the LDP candidate Koizumi had nominated. Abe allowed these individuals to rejoin the party, a decision that generated negative publicity. As we explained above, his support rate declined and within a year he had resigned. The trajectory of the LDP's two next leaders was similar, with both meeting similar fates. By summer 2009, support for the LDP had dipped below that of the DPJ for the first time. In the ensuing election, DPJ leader Hatoyama Yukio did for his party's candidates what Koizumi had done for LDP candidates in 2009: He made the election about a single idea (change of government) and convinced people that a vote for a DPJ candidate was a vote for this idea. The power of this message ended up increasing the DPJ's PR vote share by 11.2% and its SSD vote share by 11%. Whereas the party had won only 17.3% of SSDs in 2005, it won 73.7% in 2009.

In a world in which electoral competition is taking place on a programmatic dimension, if we still observe LDP victories, then it is reasonable to attribute those victories to its superior performance on this dimension. In other words, the LDP must be winning because its programmatic policies are more attractive than those offered by the other parties. Yet this assumption has been dealt a major blow in recent years by work that uses experiments conducted on nationally representative samples of voters to probe the relative attractiveness of the policies offered by the major parties contesting Japan's 2014, 2017, and 2021 Lower House elections. In one experiment, respondents were presented with pairwise comparisons of different hypothetical bundles of policy positions and asked to select the bundle they most preferred. Presenting respondents with multiple pairwise comparisons of different policy bundles allows the researcher to derive estimates of the degree to which a given policy position increases or decreases overall support for a given policy bundle. Using this design, Horiuchi, Smith and Yamamoto (2018) found that of the eleven policy positions that were distinct from the LDP's in the 2014 election, nine were more popular than the LDP's, and Eshima et al. (N.D.) found that the LDP's policy bundle in the 2017 and 2021 Lower House elections had a lower average evaluation than any other party, with the exception of its coalition partner, the Komeito. In a similar experiment that replaced

Downloaded from https://www.cambridge.org/core. Oxford Union Society, on 11 May 2025 at 21:01:11, subject to the Cambridge Core terms of use, available at https://www.cambridge.org/core/terms. https://doi.org/10.1017/9781009588522.002

policy bundles with hypothetical bundles of candidate attributes, Horiuchi, Smith and Yamamoto (2020) found that the addition of "the LDP" onto a given candidate lowered support for that candidate relative to when respondents were told she was an independent.

These experiments made use of the actual policy promises offered by parties in these elections and the actual attributes of candidates running. They also demonstrated consistent results, about the relative unpopularity of the LDP's policy positions, across multiple elections. As a result, these studies deal a major blow to claims that LDP victories in recent years can be attributed to superior performance on the programmatic dimension. Indeed, the main takeaway is not just that the LDP's policies are *unpopular*, it is that they are among the *least popular* of any party competing. Importantly, we cannot go back in time and run these experiments on Japanese voters in the 2000s. It is possible that when LDP candidates were squaring off against a candidate from a single, unified opposition party in their SSD, as many were the 2000s, the pressure to court the median voter would have been so great that it led to a more concerted effort to craft policy proposals catering to this voter. It is possible that the proliferation of opposition parties and SSD candidates in recent years has alleviated this pressure, allowing LDP candidates to move toward their preferred policies and away from those popular with the median voter (Sakaiya 2009). Regardless, these studies suggest that, at least in the post-2014 world, competition on the programmatic dimension is playing less of a role in LDP's election victories than we thought. Put bluntly, these studies offer strong evidence that *something else*, other than competition on policy grounds, is likely driving LDP election victories.

2.5 DISTRIBUTIVE POLITICS?

A second category of explanations holds that people vote for the LDP because there are distributive advantages in doing so. Specifically, LDP politicians are said to be adept at using their access to government resources to craft benefits and allocate spending in ways that create loyal groups of supporters, who can be relied on to turn out and vote for them, election after election (Reed 2021; Christensen and Selway 2017; McMichael 2018; Reed, Scheiner and Thies 2012; Pempel 2010; Krauss and Pekkanen 2010; Saito 2010; Scheiner 2006; Bouissou 1999; Tani 1998; Ramseyer and Rosenbluth 1993; Sone and Kanazashi 1989; Curtis 1971; Thayer 1969). Regardless of whether goods are particularistic spending for one's community or preferential tax treatment, regulatory favors, and protection from international competition for nationally

Downloaded from https://www.cambridge.org/core. Oxford Union Society, on 11 May 2025 at 21:01:11, subject to the Cambridge Core terms of use, available at https://www.cambridge.org/core/terms. https://doi.org/10.1017/9781009588522.002

organized groups of voters, distributive politics explanations hold that voters on the receiving end of such goods cannot be certain they would receive them under an alternative government, so continue voting LDP. In this account, an "I'll scratch your back, if you scratch mine" relationship between the LDP and select groups of constituents explains why the party is able to vanquish its opponents, election after election.

What kind of goods do LDP politicians provide? One is government funds for voters in a politician's electoral district, which take the form of what Naoi (2015, 56) calls "geographically targetable public investment projects." Scheiner (2005) makes the case that LDP politicians in rural areas devote an inordinate amount of time trying to secure such projects on account of the fact that municipalities in Japan are fiscally dependent on the central government and this dependence is greatest for rural municipalities. Fiscal dependence, combined with voter expectations that the role of the politician is to provide what he calls "clientelistic goods," creates a situation in which local mayors and assembly members cannot avoid being pulled into relationships with LDP-affiliated Lower House Members, in which the local politician mobilizes votes on behalf of the LDP Diet Member in exchange for the latter's delivery of goods. In her account of how LDP leaders built support for lowering tariffs and signing trade and investment agreements with other countries by distributing "side payments" to LDP members, Naoi (2015) shows that the appeal of such projects was not limited to LDP politicians in rural areas. A second good LDP politicians provide is policy favors for special interest groups whose members reside in more than one electoral district. Groups organized at the national level, whom LDP politicians have courted with all manner of favorable regulatory, protectionist, and tax policies, include farmers, physicians, special postmasters, proprietors of small and medium-sized businesses, the families of deceased soldiers, religious organizations, and declining industries and sectors (Maclachlan and Shimizu 2022; Reed 2021; Gentry 2021; Maclachlan 2006; Naoi 2015; Estevez-Abe 2008; Davis and Oh 2007; Davis 2003).

While particularistic spending geared at narrow segments of the electorate and pandering to special interests are features of politics in many countries, scholars have attributed the outsized role they played in the election campaigns of LDP politicians to the SNTV-MMD electoral system (Catalinac 2016; Krauss and Pekkanen 2010; Estevez-Abe 2008; Ramseyer and Rosenbluth 1993). As I explained above, when candidates from the same party are competing against each other for a limited number of seats, candidates cannot rely exclusively on their party label. Instead, personal popularity and name recognition become key to winning (Carey and Shugart 1995). A body of work contends that the main

Downloaded from https://www.cambridge.org/core. Oxford Union Society, on 11 May 2025 at 21:01:11, subject to the Cambridge Core terms of use, available at https://www.cambridge.org/core/terms. https://doi.org/10.1017/9781009588522.002

reason LDP politicians devoted such a lot of time to the first good, particularistic spending, is because of the premium placed on cultivating strong, personal ties to constituents (e.g., Catalinac 2015; Hirano 2006; Ramseyer and Rosenbluth 1993). In this account, a causal line can be drawn from the need to cultivate personal ties with constituents to the need to provide particularism. A causal line can further be drawn from the need to provide particularism to other facets of Japanese politics, such as why the LDP is a factionalized party. The LDP politicians struggling to build their reputations as people who could deliver the goods were only too happy to exchange their vote in the party's leadership election – which determines who becomes the prime minister – for the bureaucratic connections, campaign funds, and other resources provided by senior members of their faction.

The party's courting of special interests was also thought to be connected to the electoral system. How? Since its formation in 1955, the LDP has been dedicated to reestablishing Japan's economic prowess and boosting economic productivity. To this end, it pursued "bureaucratically-led industrial policies, tightly balanced budgets, rapid technological improvement of large-scale firms, domestic oligopolization, and the aggressive pursuit of export markets" (Pempel 2010). This medley of policies proved successful, sustaining the double-digit growth rates that had begun during the Korean War through until 1969 and keeping growth roughly double that of OECD countries for many years thereafter. The dramatic expansion of Japan's economy increased the size of the government's budget, on the one hand, but it also created vast disparities in wealth across sector and region, on the other. These disparities gave voters who felt they were *not* enjoying as many of the fruits of the economic miracle reason to seek government protection (Pempel 2010; Estevez-Abe 2008; Scheiner 2006). Voters in rural areas experiencing depopulation and inadequate fiscal resources were in this category, as were voters employed in small businesses and declining industries, who faced stiff competition from firms in urban areas and later, from global firms, as governments made concessions to facilitate the entry of Japanese products into foreign markets (Naoi 2015; Davis 2003).

Under a different electoral system, the emergence of a set of economic losers might have sowed the seeds for a protectionist, redistribution-oriented party to emerge and contest elections *against* the productivity-oriented LDP. In Japan, however, a coalition championing the interests of these voters emerged *within* the LDP, in the form of members hailing from depopulating areas and with sizeable chunks of constituents in declining sectors. These politicians wasted little time in pushing for government resources to be channeled toward propping these sectors up and

Downloaded from https://www.cambridge.org/core. Oxford Union Society, on 11 May 2025 at 21:01:11, subject to the Cambridge Core terms of use, available at https://www.cambridge.org/core/terms. https://doi.org/10.1017/9781009588522.002

minimizing any disadvantages they faced (Naoi 2015; Estevez-Abe 2008; Scheiner 2006). As a result, the LDP became a party that mixed "high growth (productivity) with localized protection (pork)" (Pempel 2010, 236).

Given that the electoral system was thought to have underpinned both components of the LDP's distributive politics strategy, it is perhaps unsurprising that the focus of scholarship on the party's electoral strategies shifted away from distributive politics in the wake of Japan's 1994 electoral reform. Above, we explained how MMM provides incentives for competition to take place on a programmatic dimension. However, a second factor may have also played a role in the supplanting of distributive politics accounts of the party's electoral dominance with programmatic ones: the absence of systematic evidence that geographically targeted spending flows to the party's core supporters, however defined. Notwithstanding the trove of studies attesting to the centrality of pork-barreling to the electoral strategies of LDP politicians, which scholars of Japanese politics engaged in fieldwork saw with their own eyes, and the compelling case made that the point of all this pork-barreling was to create and nurture groups of loyal supporters, a survey of the literature reveals that whenever scholars made the effort to collect and analyze data on central government outlays to lower tier entities, whether prefectures, electoral districts, or municipalities, they found little-to-no evidence that the party's *core supporters*, places that deliver higher-than-average vote shares for the party, have been favored when it came to spending (McMichael 2018; Saito 2010; Hirano 2011; Horiuchi and Saito 2003).

Four studies in particular cast doubt on the claim that LDP politicians contest elections by channeling government resources toward core supporters. One, Horiuchi and Saito (2003) analyzed government outlays to Japanese municipalities in the 1991–1998 period. While their research question was whether malapportionment (defined as having more Diet Members per voter) impacted the amount of money municipalities received from the government, their research also found that, controlling for other potential confounders, municipalities in electoral districts with *greater* support for the LDP received *less* money than their counterparts in electoral districts with less support for the party. Two, Hirano (2011), too, studied government outlays to Japanese municipalities. Leveraging the sudden deaths of sixty-seven Lower House Members in the 1977–1992 period (forty-seven of whom were LDP), he found that allocations received by municipalities in the bailiwicks of a recently deceased politician did not decline in the wake of their deaths. He also compared allocations received by municipalities in the bailiwicks of LDP politicians who narrowly won and lost reelection, respectively. While he

Downloaded from https://www.cambridge.org/core. Oxford Union Society, on 11 May 2025 at 21:01:11, subject to the Cambridge Core terms of use, available at https://www.cambridge.org/core/terms. https://doi.org/10.1017/9781009588522.002

found some evidence that municipalities in the bailiwicks of LDP politicians who narrowly won received larger allocations, overall he concluded that LDP politicians were not "pipelines" between the national treasury and their constituents and instead had "limited personal influence over the amount of government transfers directed to their constituents" (Hirano 2011, 1082). Three, McMichael (2018) studied government outlays to Japanese prefectures between 1958 and 1993. His research question was whether prefectures exhibiting greater loyalty to the LDP, defined as electing more LDP-affiliated Diet Members, received more transfers. Controlling for confounders, he found no evidence that prefectures with more LDP politicians among their Diet representatives received more money, and in some regression specifications, he found evidence of the *reverse*: they received less.

Four, in a book-length treatment of this topic, Saito (2010) studied government outlays to municipalities and Lower House electoral districts between 1977 and 1990. His first research question was whether electoral districts with more municipalities and more Diet representatives per voter received more transfers. In a regression with electoral districts as the units of observation, he found no relationship between support for the LDP, measured in share of Diet representatives who are LDP-affiliated, and the amount of transfers received. His second research question was whether municipalities returning greater support for the LDP received more transfers. Operationalizing support for the LDP as the degree to which a given municipality's LDP vote share deviated from that of the *average* LDP vote share in its electoral district, he found evidence for his hypothesis when he operationalized transfers as the degree to which a municipality's transfer allocation deviated from that of its district's average, but not when he used the absolute value of (per capita) transfers it received. In regressions with the absolute value of transfer received, he found a statistically significant *negative* relationship between support and transfers in one specification (municipalities returning more support for the LDP received fewer transfers) and no relationship between support and transfers in another.

Ultimately, the findings in these studies end up reinforcing a key takeaway of Reed (2001), who synthesized all prior work on the political determinants of inter-governmental transfers in Japan and concluded that many of the most plausible anecdotes of political influence over grant allocation "evaporate on closer investigation" (Reed 2001, 181). He contends that anecdotes alleging undue political influence capture scholarly and media attention because they are "interesting stories that play on our sense of cynicism" but are "simply false" (Reed 2001, 125). He points out that these anecdotes can also redound to the benefit of the politician

Downloaded from https://www.cambridge.org/core. Oxford Union Society, on 11 May 2025 at 21:01:11, subject to the Cambridge Core terms of use, available at https://www.cambridge.org/core/terms. https://doi.org/10.1017/9781009588522.002

involved, who can use the revelation of undue influence to claim credit for allocations that actually had little to do with her. When it comes to publicly funded construction projects, for example, he writes that all evidence suggests they are allocated according to "impersonal political and bureaucratic criteria," and not political influence (Reed 2001, 124).

2.6 HOW THIS BOOK CONTRIBUTES

As we have seen, literature on the LDP's longevity has furnished a number of compelling explanations, ranging from electoral system–derived advantages to claims that the party captures more votes than other parties because voters prefer its policies or are exchanging their votes for distributive benefits. However, these arguments have shortcomings. Electoral system–based explanations can explain how relatively *small* shares of the vote translate into relatively *large* shares of seats but have little to say about how the party gathers those votes in the first place. Programmatic explanations provide a plausible account of the party's victories for a portion of the elections under study but have been undermined by evidence that the party's issue positions are unpopular with the broader electorate. Moreover, this evidence comes from the 2014, 2017, and 2021 Lower House elections, which saw the LDP walk away with some of its largest seat majorities to date. Distributive explanations, which center on the idea that LDP politicians leverage demand for central government resources to form relationships with voters, in which votes are exchanged for goods, are theoretically compelling and jibe with many other facets of Japanese politics but fall apart when subject to empirical testing.

In this book, I draw on innovations in theory, data, and empirics to make the case that many LDP politicians contest elections by making the distribution of geographically targetable government resources to municipalities in their electoral districts contingent on the level of support each municipality provided them in the most recent election. By making the amount of money a municipality receives contingent on its position in a rank ordering of municipalities in the same electoral district, constructed on the basis of electoral loyalty, I explain how LDP politicians are able to create a situation where voters in relatively supportive municipalities, which stand to gain a lot with a few more votes for the politician, are heavily dissuaded from casting their votes for anyone else. Drawing on prior work, I explain why allocating resources in this manner, according to a "tournament," has the effect of encouraging voters in supportive municipalities to reason that, given their vote holds very little influence over who wins the election, they may as well use it to make sure their municipality remains a priority in the eyes of the politician after

Downloaded from https://www.cambridge.org/core. Oxford Union Society, on 11 May 2025 at 21:01:11, subject to the Cambridge Core terms of use, available at https://www.cambridge.org/core/terms. https://doi.org/10.1017/9781009588522.002

she reaches the Diet (Smith and Bueno de Mesquita 2012, 2019; Smith, Bueno de Mesquita and LaGatta 2017; Catalinac, Bueno de Mesquita and Smith 2020). In these municipalities, plenty of voters may *want* another politician elected but draw the line at using their *own* vote to elect her.

Critically, this electoral strategy is possible only when electoral districts are divisible into multiple geographically defined units, at which electoral support is observable and resources targetable. Chapter 5 explains that under Japan's old electoral system, the relatively *small* number of electoral districts and relatively *large* number of municipalities, in addition to the rule that electoral districts be drawn *around* the borders of municipalities, meant that more than 90% of electoral districts met these conditions. The redrawing of electoral districts that accompanied Japan's 1994 electoral reform, plus the municipal amalgamations of the 2000s and ongoing urbanization, has reduced the share of electoral districts meeting these conditions to around 50% of electoral districts in the last election for which we have data (2014). Thus, the electoral strategy illuminated in these pages is not a complete account of LDP dominance, as we can only speculate about what happens in electoral districts that do not meet these conditions.

For Japanese politics scholars, an important takeaway is that it was premature to presume that the rise of programmatic party competition after Japan's 1994 electoral reform, documented by numerous scholars, meant that we could dispense with explanations of LDP victories rooted in distributive politics. In this sense, my findings corroborate Scheiner (2006)'s expectation that the 1994 reform would be unlikely to shift competition to programmatic grounds entirely. My study suggests, however, that the reform may have shifted competition to programmatic grounds almost entirely in places where the new electoral district rules out the possibility of a tournament. In Scheiner (2006)'s account, it is municipalities' dependence on central government resources that drives whether or not LDP politicians rely on a distributive politics–based strategy. Given that the 1994 electoral reform did little to alter this dependence, the implication is that we should observe a similar reliance on distributive politics before and after reform. I contend, in contrast, that whether or not LDP politicians choose distributive politics has less to do with *demand*, as central government resources can be massaged to appeal to wealthier municipalities, and more to do with *institutions*: namely, the way the boundaries of electoral districts are configured, relative to municipalities.

In this way, my study lends empirical support to the observation that the LDP is a *bifurcated* party, with some members investing heavily in old-fashioned vote-mobilization techniques and filling their manifestos with promises of particularism, while other members stake out positions

Downloaded from https://www.cambridge.org/core. Oxford Union Society, on 11 May 2025 at 21:01:11, subject to the Cambridge Core terms of use, available at https://www.cambridge.org/core/terms. https://doi.org/10.1017/9781009588522.002

on programmatic politics to win (Koellner 2009; Scheiner 2006). Comparative politics scholars would describe the LDP as "diversified linkage party," meaning that, when viewed in the aggregate, the linkages the LDP cultivates with voters encompass both distributive and programmatic dimensions (Kitschelt and Singer 2018; Magaloni, Diaz-Cayeros and Estévez 2007). My study provides a theory that can account for why these diversified linkages exist and which LDP politicians cultivate each type of linkage. Future scholarship should investigate how the party manages tensions that likely arise from the use of two different electoral strategies and how the tournaments pursued by half its members impact the positions on programmatic policies staked out by the other half, and vice versa. For now, however, let us turn to elucidating the book's theory.

Downloaded from https://www.cambridge.org/core. Oxford Union Society, on 11 May 2025 at 21:01:11, subject to the Cambridge Core terms of use, available at https://www.cambridge.org/core/terms. https://doi.org/10.1017/9781009588522.002